INTERNATIONAL STANDARD

ISO 11040-4

Third edition
2015-04-01

Prefilled syringes —

Part 4: Glass barrels for injectables and sterilized subassembled syringes ready for filling

Seringues préremplies —

Partie 4: Cylindres en verre pour produits injectables et seringues pré-assemblées stérilisées préremplissables

Reference number
ISO 11040-4:2015(E)

--`,,,,`,,,,,`,`,`,,,,,`,`,`,,,,`,`,`-`-`,,`,,`,`,,`---

© ISO 2015

Copyright International Organization for Standardization
Provided by IHS Markit under license with ANSI
No reproduction or networking permitted without license from IHS

Licensee=Becton Dickinson - Loc 1 - 61, 64/5984713001, User=Chiu, Shelly
Not for Resale, 10/14/2019 19:10:41 MDT

COPYRIGHT PROTECTED DOCUMENT

© ISO 2015

All rights reserved. Unless otherwise specified, no part of this publication may be reproduced or utilized otherwise in any form or by any means, electronic or mechanical, including photocopying, or posting on the internet or an intranet, without prior written permission. Permission can be requested from either ISO at the address below or ISO's member body in the country of the requester.

ISO copyright office
Case postale 56 • CH-1211 Geneva 20
Tel. + 41 22 749 01 11
Fax + 41 22 749 09 47
E-mail copyright@iso.org
Web www.iso.org

Published in Switzerland

Copyright International Organization for Standardization
Provided by IHS Markit under license with ANSI
No reproduction or networking permitted without license from IHS
Licensee=Becton Dickinson - Loc 1 - 61, 64/5984713001, User=Chiu, Shelly
Not for Resale, 10/14/2019 19:10:41 MDT

Contents

Page

Foreword ... **iv**
Introduction ... **vi**
1 Scope ... **1**
2 Normative references ... **1**
3 Terms and definitions ... **2**
4 General requirements ... **3**
4.1 Quality systems ... 3
4.2 Testing ... 3
4.3 Documentation ... 3
5 Syringe barrel ... **4**
5.1 Design including dimensions ... 4
5.2 Functional testing of Luer connection ... 7
5.3 Material ... 7
5.4 Performance requirements ... 7
5.4.1 Hydrolytic resistance ... 7
5.4.2 Annealing quality ... 7
5.4.3 Lubrication of the inner surface ... 7
5.4.4 Flange breakage resistance ... 7
5.4.5 Luer cone breakage resistance ... 8
6 Sterilized subassembled syringes ready for filling ... **8**
6.1 General ... 8
6.2 Sterility ... 8
6.3 Pyrogenicity/endotoxins ... 9
6.4 Particles ... 9
6.5 Additional requirements to specific components of sterilized subassembled syringes ready for filling ... 9
6.5.1 Barrel ... 9
6.5.2 Needle ... 10
6.5.3 Closure system ... 11
6.6 Closure system barrel integrity ... 12
7 Packaging ... **12**
8 Labelling ... **12**
Annex A (informative) **Examples of types of sterilized subassembled syringes ready for filling** ... **13**
Annex B (informative) **Head designs** ... **15**
Annex C (normative) **Test methods for syringe barrels** ... **17**
Annex D (informative) **Sample preparation for endotoxin and particulate determination** ... **23**
Annex E (informative) **Glide force test method to evaluate syringe lubrication** ... **27**
Annex F (informative) **Needle penetration test** ... **30**
Annex G (normative) **Test methods for closure systems** ... **33**
Annex H (informative) **Dye solution tightness test** ... **48**
Bibliography ... **50**

--`,,,,`,,,,,`,`,`,,,,,``,`-`-`,,`,`,`,,`---

Copyright International Organization for Standardization
Provided by IHS Markit under license with ANSI
No reproduction or networking permitted without license from IHS
Licensee=Becton Dickinson - Loc 1 - 61, 64/5984713001, User=Chiu, Shelly
Not for Resale, 10/14/2019 19:10:41 MDT

Foreword

ISO (the International Organization for Standardization) is a worldwide federation of national standards bodies (ISO member bodies). The work of preparing International Standards is normally carried out through ISO technical committees. Each member body interested in a subject for which a technical committee has been established has the right to be represented on that committee. International organizations, governmental and non-governmental, in liaison with ISO, also take part in the work. ISO collaborates closely with the International Electrotechnical Commission (IEC) on all matters of electrotechnical standardization.

The procedures used to develop this document and those intended for its further maintenance are described in the ISO/IEC Directives, Part 1. In particular the different approval criteria needed for the different types of ISO documents should be noted. This document was drafted in accordance with the editorial rules of the ISO/IEC Directives, Part 2 (see www.iso.org/directives).

Attention is drawn to the possibility that some of the elements of this document may be the subject of patent rights. ISO shall not be held responsible for identifying any or all such patent rights. Details of any patent rights identified during the development of the document will be in the Introduction and/or on the ISO list of patent declarations received (see www.iso.org/patents).

Any trade name used in this document is information given for the convenience of users and does not constitute an endorsement.

For an explanation on the meaning of ISO specific terms and expressions related to conformity assessment, as well as information about ISO's adherence to the WTO principles in the Technical Barriers to Trade (TBT) see the following URL: Foreword - Supplementary information

The committee responsible for this document is ISO/TC 76, *Transfusion, infusion and injection, and blood processing equipment for medical and pharmaceutical use*.

This third edition cancels and replaces the second edition (ISO 11040-4:2007), which has been technically revised and contains the following changes:

— Scope has been extended by adding sterilized subassembled syringes ready for filling and appropriate requirements, as well as test methods, have been included;

— general requirements have been added on quality systems, testing, and documentation;

— requirements on labelling have been revised;

— requirements on packaging have been added;

— requirements on syringes barrels have been revised by

  — adding requirements and related test methods for flange breakage resistance and Luer cone breakage resistance,

  — adding requirements on lubrication,

  — adding requirements and guidance on tolerances for Luer conical fittings, as well as on functional testing of Luer connections, and

  — deleting the clause on designation.

ISO 11040 consists of the following parts, under the general title *Prefilled syringes*:

— *Part 1: Glass cylinders for dental local anaesthetic cartridges*

— *Part 2: Plunger stoppers for dental local anaesthetic cartridges*

— *Part 3: Seals for dental local anaesthetic cartridges*

© ISO 2015 – All rights reserved
Copyright International Organization for Standardization
Provided by IHS Markit under license with ANSI
No reproduction or networking permitted without license from IHS
Licensee=Becton Dickinson - Loc 1 - 61, 64/5984713001, User=Chiu, Shelly
Not for Resale, 10/14/2019 19:10:41 MDT

— *Part 4: Glass barrels for injectables and sterilized subassembled syringes ready for filling*

— *Part 5: Plunger stoppers for injectables*

— *Part 6: Plastics barrels for injectables*

— *Part 7: Packaging systems for sterilized subassembled syringes ready for filling*

— *Part 8: Requirements and test methods for finished prefilled syringes*

© ISO 2015 – All rights reserved

Copyright International Organization for Standardization
Provided by IHS Markit under license with ANSI
No reproduction or networking permitted without license from IHS
Licensee=Becton Dickinson - Loc 1 - 61, 64/5984713001, User=Chiu, Shelly
Not for Resale, 10/14/2019 19:10:41 MDT

Introduction

In the past, ampoules and injection vials were mainly used for (parenteral) injectable products. However, for the injection of the products contained in those ampoules and vials, a hypodermic syringe combined with the appropriate injection needle is also needed. This means the injectable product has to be transferred by the user into the hypodermic syringe before its final use. This procedure is not only time-consuming, but also presents a great number of possibilities for contamination.

To ensure safe use of an injectable product, prefilled syringes for single use are on the market for many years. Without a doubt, such prefilled syringes permit immediate injection of the product contained after relatively simple handling. These syringes can also be used in injectors with automated functions where further and particular requirements apply.

Based on the diameter of the prefilled syringes, appropriate components, such as rubber plungers, tip caps, needle shields, and other closure systems can also be standardized. In conjunction with the right sealing components, they offer a system for (parenteral) injectable use. The producers of filling machines can apply this part of ISO 11040 to achieve a degree of standardization in the equipment of the machines.

At the start of prefilled syringe processing by the pharmaceutical industry, syringes made of tubing glass were delivered to the pharmaceutical companies in the form of so called non-sterile “bulkware” only. The process steps washing, drying, inner lubrication, sealing the syringe with a closure system, sterilization, as well as filling and closing, were then performed in the pharmaceutical companies. Processing of “bulkware” is performed like this until today. Sterilized subassembled syringes have partially replaced non-sterile “bulkware”.

In the case of sterilized subassembled syringes ready for filling, responsibility for the aforementioned process steps relevant to the injectable product lies with the manufacturer of the primary packaging material. Following the assembly of the needle shield on syringes with a staked needle or tip caps for the Luer cone version, the subassembled syringes are placed into so called nests. The nests, in turn, are placed into a plastic tub. The syringes in the nest are protected by means of an insert liner and the tub itself is sealed by a sealing lid (which is currently and, so far, primarily achieved using a porous material). Thus, the tub properly sealed with the sealing lid represents the “sterile barrier system”. The sealed tub is then wrapped into a sealable bag and, thus, ready for sterilization which is currently and, so far, primarily performed using ethylene oxide.

In this form, the sterilized subassembled syringes ready for filling are delivered to the pharmaceutical companies in a sterile condition, where they are processed on suitable machines.

© ISO 2015 – All rights reserved
Copyright International Organization for Standardization
Provided by IHS Markit under license with ANSI
No reproduction or networking permitted without license from IHS
Licensee=Becton Dickinson - Loc 1 - 61, 64/5984713001, User=Chiu, Shelly
Not for Resale, 10/14/2019 19:10:41 MDT

Prefilled syringes —

Part 4: Glass barrels for injectables and sterilized subassembled syringes ready for filling

1 Scope

This part of ISO 11040 applies to

— tubing-glass barrels (single-chamber design) for injection preparations, and

— sterilized subassembled syringes ready for filling.

It specifies materials, dimensions, quality, and performance requirements, as well as relevant test methods.

This part of ISO 11040 also specifies those components that are part of the sterilized subassembled syringe ready for filling.

Glass barrels and sterilized subassembled syringes ready for filling in accordance with this part of ISO 11040 are intended for single use only.

Components to complete the subassembled syringe, such as plunger and rod, are not specified in this part of ISO 11040.

NOTE Attention is drawn to applicable national or regional regulations such as Ph. Eur., USP, or JP. Where relevant, specific references to Ph. Eur., USP, and JP have been given in specific clauses or subclauses of this part of ISO 11040.

2 Normative references

The following documents, in whole or in part, are normatively referenced in this document and are indispensable for its application. For dated references, only the edition cited applies. For undated references, the latest edition of the referenced document (including any amendments) applies.

ISO 594-1,[1)] Conical fittings with a 6 % (Luer) taper for syringes, needles and certain other medical equipment — Part 1: General requirements

ISO 594-2,[1)] Conical fittings with 6 % (Luer) taper for syringes, needles and certain other medical equipment — Part 2: Lock fittings

ISO 720:1985, *Glass — Hydrolytic resistance of glass grains at 121 degrees C — Method of test and classification*

ISO 4802-1, *Glassware — Hydrolytic resistance of the interior surfaces of glass containers — Part 1: Determination by titration method and classification*

ISO 4802-2, *Glassware — Hydrolytic resistance of the interior surfaces of glass containers — Part 2: Determination by flame spectrometry and classification*

ISO 7864, *Sterile hypodermic needles for single use*

ISO 7886-1:1993, *Sterile hypodermic syringes for single use — Part 1: Syringes for manual use*

1) ISO 594-1 and ISO 594-2 will be replaced by ISO 80369-7 (currently in preparation by ISO/TC 210).

© ISO 2015 – All rights reserved

Copyright International Organization for Standardization
Provided by IHS Markit under license with ANSI
No reproduction or networking permitted without license from IHS
Licensee=Becton Dickinson - Loc 1 - 61, 64/5984713001, User=Chiu, Shelly
Not for Resale, 10/14/2019 19:10:41 MDT

ISO 8871-1, *Elastomeric parts for parenterals and for devices for pharmaceutical use — Part 1: Extractables in aqueous autoclavates*

ISO 9626, *Stainless steel needle tubing for the manufacture of medical devices*

ISO 10993-7, *Biological evaluation of medical devices — Part 7: Ethylene oxide sterilization residuals*

ISO 11040-5, *Prefilled syringes — Part 5: Plunger stoppers for injectables*

ISO 80369-1, *Small-bore connectors for liquids and gases in healthcare applications — Part 1: General requirements*

3 Terms and definitions

For the purposes of this document, the following terms and definitions apply.

3.1
customer
business entity which purchases syringe barrels or sterilized subassembled syringes ready for filling and conducts further processing or filling as appropriate

3.2
manufacturer
business entity which performs or is otherwise responsible for the manufacturing of the syringe barrels (bulkware) or for the sterilized subassembled syringes ready for filling by the customer

3.3
needle shield
syringe closure used with staked needle subassembled syringes that is designed to protect the needle point/bevel from damage, to allow sterilization of the needle, and to maintain sterility of the contents of the syringe and of the needle up to the time of injection

3.4
prefilled syringe
container system filled with the injectable product ready for injection

Note 1 to entry: Components of syringes are barrel, needle, closure system, plunger, and rod. Examples of sterilized subassembled syringes ready for filling including components are illustrated in Annex A.

3.5
syringe barrel
cylindrical glass body with front end and finger flange

Note 1 to entry: See Figure 1.

Note 2 to entry: The syringe barrel can be equipped with a staked needle.

3.6
sterilized subassembled syringe ready for filling
subassembly that has been pre-treated, consisting of a syringe barrel and a closure system

Note 1 to entry: The subassembly has been pre-treated by applying the following processes, as applicable:

— assembling/lubricating a needle;

— final washing/pyrogen reduction;

— drying;

— applying lubricant to the inner surface;

— sealing the syringe with a closure system;

© ISO 2015 – All rights reserved
Copyright International Organization for Standardization
Provided by IHS Markit under license with ANSI
No reproduction or networking permitted without license from IHS
Licensee=Becton Dickinson - Loc 1 - 61, 64/5984713001, User=Chiu, Shelly
Not for Resale, 10/14/2019 19:10:41 MDT

— packing (see ISO 11040-7);

— sterilization.

Note 2 to entry: Examples of sterilized subassembled syringes ready for filling including components are illustrated in Annex A.

3.7
syringe closure system
component or multi-component system designed to close the syringe system at the front end that is designed to allow sterilization of the glass tip and maintain sterility of the contents of the syringe up to the time of injection

EXAMPLE Tip cap, needle shield, tamper-evident closure system.

Note 1 to entry: See 3.3.

3.8
user
patient or health care provider (clinical personnel, doctor, or lay person) who uses or applies the injectable product contained in the syringe

4 General requirements

4.1 Quality systems

The activities described within this part of ISO 11040 shall be carried out within a formal quality system.

NOTE ISO 15378 contains requirements for a suitable quality management system for primary packaging materials for medicinal products.

4.2 Testing

4.2.1 Any suitable test system can be used when the required accuracy (calibration) and precision (gauge repeatability and reproducibility) can be obtained. The gauge repeatability and reproducibility of the test apparatus shall be no greater than 20 % of the allowed tolerance range for any given measurement. For destructive test measurements, the gauge repeatability and reproducibility shall be no greater than 30 % of the allowed tolerance range. At a minimum, the gauge repeatability and reproducibility should cover ±2 standard deviations (thereby covering approximately 95 % of the variation).

EXAMPLE A measurement system with a measurement specification limit of ±0,01 ml (range of 0,02 ml) comes out of the gauge repeatability and reproducibility with a gauge repeatability and reproducibility/tolerance range ratio of 20 %, which means that the gauge repeatability and reproducibility (four standard uncertainties) equals 0,02 ml/5 = 0,004 ml. The uncertainty of the measurement is ±2 standard deviations (see Reference [22]), which equals to 0,002 ml.

4.2.2 The sampling plans used for the selection and testing of sterilized subassembled syringes ready for filling or components thereof shall be based upon statistically valid rationale.

NOTE Examples of suitable sampling plans are given in ISO 2859-1 and ISO 3951- series; see also Reference [25].

4.2.3 Unless agreed otherwise, testing shall be performed at ambient laboratory conditions.

4.3 Documentation

4.3.1 Demonstration of compliance with the requirements of this part of ISO 11040 shall be documented.

© ISO 2015 – All rights reserved

Copyright International Organization for Standardization
Provided by IHS Markit under license with ANSI
No reproduction or networking permitted without license from IHS
Licensee=Becton Dickinson - Loc 1 - 61, 64/5984713001, User=Chiu, Shelly
Not for Resale, 10/14/2019 19:10:41 MDT

4.3.2 All documentation shall be retained for a specified period of time. The retention period shall consider factors such as regulatory requirements, expiration date, and traceability.

4.3.3 Documentation of compliance with the requirements can include, but is not limited to, performance data, specifications, and test results from validated test methods.

4.3.4 Electronic records, electronic signatures, and handwritten signatures executed to electronic records that contribute to validation, process control, or other quality decision-making processes shall be reliable.

5 Syringe barrel

5.1 Design including dimensions

5.1.1 The dimensions of the syringe barrel shall be as shown in Figure 1 and as given in Table 1, except for the total barrel length and the wall thickness that are given for information only.

The type of head design shall be agreed upon between the manufacturer and the customer. For the Luer and the Luer lock design, ISO 594-1, ISO 594-2, and ISO 80369-1 apply, with the addition that the dimension of the Luer conical fitting shall comply with Figure 2.

NOTE Commercially developed glass Luer cone and Luer lock prefilled syringes routinely mate with Luer devices in order to effectively administer the medication stored within the syringe. Examples are disposable needles, needleless connector devices, and other forms of Luer access. The current state of the art syringe tip glass forming technology for manufacturing glass prefilled syringes cannot conform completely to the standards on Luer connectors (see ISO 594 series). The ISO 594 series has been developed using ground glass, metal, and injection moulded technology, as well as plastic resins, as the baseline rationale for compliance and capabilities.

Differences in the manufacturing methodologies and the need for expanded tolerances in the glass forming manufacturing process are acknowledged. This is why dimensional tolerances are different. While these tolerances are outside of the range of ISO 594 with respect to some of the dimensions, the glass formed tip does successfully mate with the injection moulded female counterparts. See 5.2 and ISO 594:1986 for functional test methods that accommodate for the formed tip manufacturing process.

Luer tip dimensions mentioned in the following figures can be checked by means of camera measurements or indirectly by using a gauge similar to the one described in ISO 594.

5.1.2 If printing of the barrel is required, it shall be agreed between the manufacturer and the customer.

© ISO 2015 – All rights reserved
Copyright International Organization for Standardization
Provided by IHS Markit under license with ANSI
No reproduction or networking permitted without license from IHS
Licensee=Becton Dickinson - Loc 1 - 61, 64/5984713001, User=Chiu, Shelly
Not for Resale, 10/14/2019 19:10:41 MDT

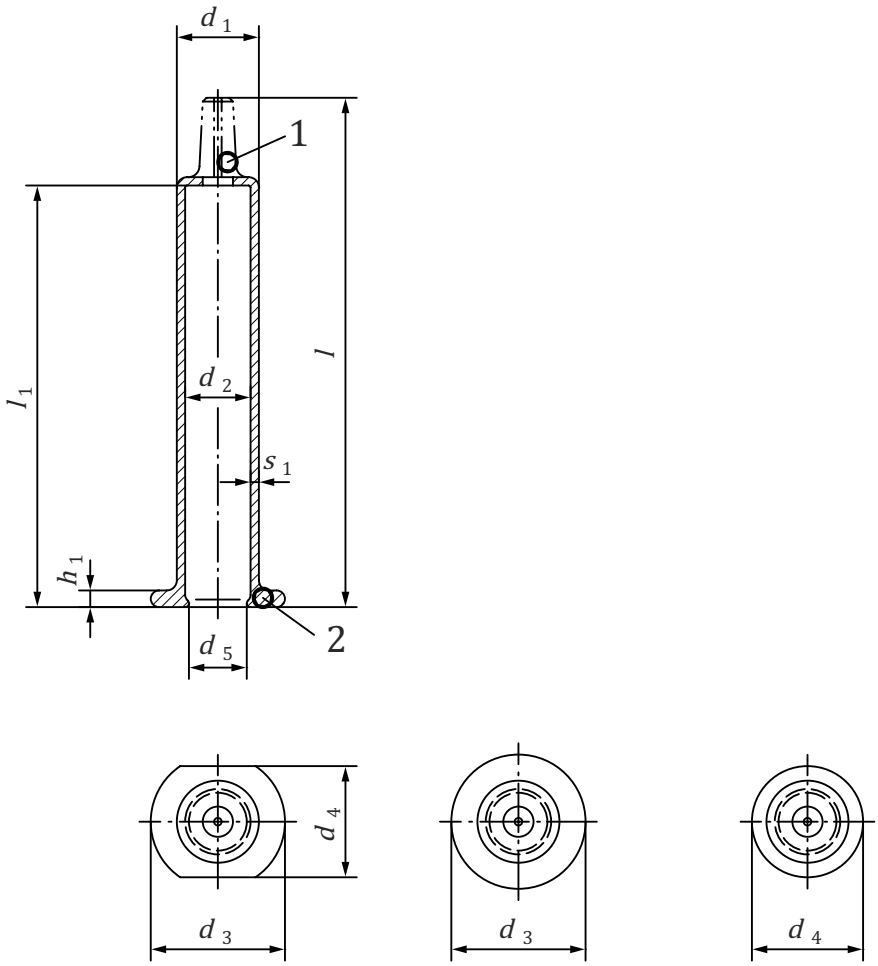

a) cut-flange b)round flange c) small-round flange

Key

1 front end

2 back end

NOTE 1 The bore diameter of the tip is subject to agreement between the manufacturer and the customer. For examples of commonly used head designs, see Annex B.

NOTE 2 The design of the finger flange is subject to agreement between the manufacturer and the customer.

Figure 1 — Typical example of a glass syringe barrel and examples of glass finger flanges

© ISO 2015 – All rights reserved

Copyright International Organization for Standardization
Provided by IHS Markit under license with ANSI
No reproduction or networking permitted without license from IHS
Licensee=Becton Dickinson - Loc 1 - 61, 64/5984713001, User=Chiu, Shelly
Not for Resale, 10/14/2019 19:10:41 MDT

Table 1 — Syringe barrel dimensions (see Figure 1)

Dimensions in millimetres

Nominal volume	Glass barrel										Finger flange					
	d_1		d_2		d_5	l_1		l^c		$s_1{}^c$	h_1		d_3		d_4	
ml	nom	tol	nom	tol	min.	nom.	tol.	nom.	tol.	≈	nom.	tol.	nom.	nom.	nom.	tol.
0,5	6,85		4,65	±0,1	4,40	47,6		57,5		1,1	1,8	±0,5	13,4	±0,4	10,5	±0,4
1[a]	8,15		6,35		6,05	54		64,0	±0,5	0,9	1,9		13,8		11	
1[b]	10,85	±0,1	8,65		8,25	35,7	±0,5	46,7		1,1	2,2		17,75		14,7	
2	10,85		8,65		8,25	49		60,0		1,1	2,2		17,75	±0,75	14,7	
2,25	10,85		8,65		8,25	54,4		66,6	±0,75	1,1	2,2	±0,5	17,75		14,7	±0,5
3	10,85		8,65	±0,2	8,25	72,2		84,4	±1,0	1,1	2,2		17,75		14,7	
5	14,45		11,85		11,45	66,7	±0,75	80,0	±0,75	1,3	2,4		23		19,5	
10	17,05	±0,2	14,25		13,85	87,25		100,5	±1,0	1,4	2,5	±0,6	27	±1	21,5	
20	22,05		19,05		18,40	96,8		114,9	±1,0	1,5	3,1		32,25		25,9	±0,6

[a] Long version.

[b] Short/standard version.

[c] Dimension on total barrel length and wall thickness are for information only.

Dimensions in millimetres

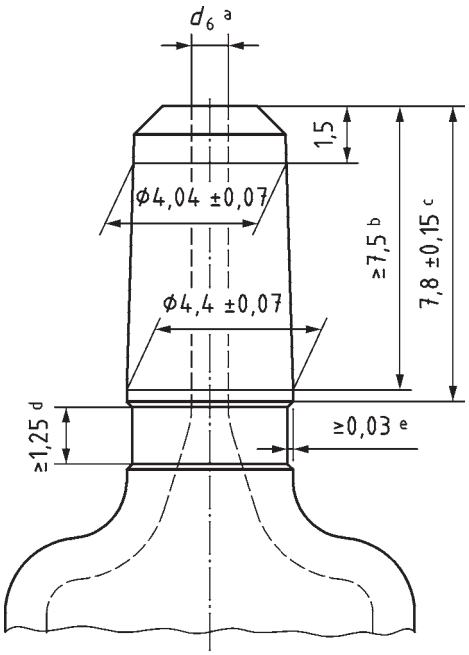

Key

a Through bore diameter to be agreed between the manufacturer and the customer.

b Luer cone length, Luer version.

c Luer cone length, Luer lock version.

d Length of the Luer lock groove.

e Depth of the Luer lock groove.

NOTE The above dimensions are not applicable to glass barrel tip designs with a staked needle.

Figure 2 — Luer conical fitting

© ISO 2015 – All rights reserved
Copyright International Organization for Standardization
Provided by IHS Markit under license with ANSI
No reproduction or networking permitted without license from IHS
Licensee=Becton Dickinson - Loc 1 - 61, 64/5984713001, User=Chiu, Shelly
Not for Resale, 10/14/2019 19:10:41 MDT

5.2 Functional testing of Luer connection

The functional performance of the glass prefilled syringe barrel with regard to the conical connection to a 6 % Luer female connector fitting shall be demonstrated through performance testing with female reference connectors made of plastic instead of steel.

NOTE The forming process of glass prefillable syringes results in a "wavy" Luer connector surface finish that is incompatible with the use of steel reference connectors for liquid and air leakage, separation force, and unscrewing torque type tests. In addition, male Luer connectors of glass prefillable syringes are often roughened on customer request.

For the purpose of demonstrating the functional performance of the syringe Luer connection and the equivalent safety of the connection, the plastic reference connectors shall be verified for compliance with the dimensional requirements of ISO 594-1.

The selected plastic material for the reference connectors shall be chosen for being representative for the normal clinical conditions of use. A rationale shall be developed for the selection of material(s).

5.3 Material

The material shall be colourless (cl) or amber (br) glass of the hydrolytic resistance grain class HGA 1 in accordance with ISO 720:1985.

Material requirements are also covered by national or regional pharmacopoeias. See requirements for glass type I as given in Ph. Eur. 3.2.1[32], USP <660>[39] and requirements in JP 7.01[47].

5.4 Performance requirements

5.4.1 Hydrolytic resistance

When tested in accordance with ISO 4802-1 or ISO 4802-2, the hydrolytic resistance of the internal surface of the glass barrel shall comply with the requirements of hydrolytic resistance container class ISO 4802-HC 1.

Before conducting the test, the back end of the barrel shall be sealed with a suitable closure element, e.g. a rubber closure.

5.4.2 Annealing quality

The maximum residual stress shall not produce an optical retardation exceeding 40 nm/mm of glass thickness when the glass barrel is viewed in a strain viewer.

The test method for residual stress is subject to agreement between the manufacturer and the customer.

5.4.3 Lubrication of the inner surface

For barrels whose inner surfaces have been lubricated, 6.5.1.2 applies.

5.4.4 Flange breakage resistance

Syringe barrels shall provide an appropriate flange breakage resistance. Limit values are subject to agreement between the manufacturer and the customer.

The flange breakage resistance shall be determined in accordance with C.1.

NOTE The flange breakage resistance test method is a reference test to provide a consistent measure for comparison of the performance of different syringes and can potentially be used as a quality measure to assess changes and monitor production. The test method might need to be adjusted to simulate specific use conditions of the syringe system, e.g. use in auto-injectors.

© ISO 2015 – All rights reserved

Copyright International Organization for Standardization
Provided by IHS Markit under license with ANSI
No reproduction or networking permitted without license from IHS
Licensee=Becton Dickinson - Loc 1 - 61, 64/5984713001, User=Chiu, Shelly
Not for Resale, 10/14/2019 19:10:41 MDT

5.4.5 Luer cone breakage resistance

Syringe barrels shall provide an appropriate Luer cone breakage resistance. Limit values are subject to agreement between the manufacturer and the customer.

The Luer cone breakage resistance shall be determined in accordance with C.2.

NOTE The Luer cone breakage resistance test method is a reference test to provide a consistent measure for comparison of the performance of different syringes and can potentially be used as a quality measure to assess changes and monitor production. The test method might need to be adjusted to simulate specific use conditions of the syringe system, e.g. use in auto-injectors.

6 Sterilized subassembled syringes ready for filling

6.1 General

6.1.1 The design of sterilized subassembled syringes ready for filling varies due to their intended use. The requirements and test methods in the following subclauses and related annexes are based on common design features and syringe components.

NOTE Common types of sterilized subassembled syringes ready for filling are illustrated in Annex A.

6.1.2 The following properties should be considered when selecting the raw materials or components and the design of the sterilized subassembled syringe ready for filling:

a) microbial barrier;

b) biocompatibility and toxicological attributes;

c) physical and chemical properties;

d) ability for sterilization and compatibility with respect to the intended sterilization process;

e) maintenance of sterility of the subassembly;

f) shelf-life limitations;

g) functionality for their intended use;

h) robustness of the closure system during transport from the manufacturer to the user.

6.1.3 The manufacturer shall have documented procedures for the design and development of sterilized subassembled syringes ready for filling.

NOTE ISO 15378 contains requirements for a suitable quality management system for primary packaging materials for medicinal products.

6.2 Sterility

Sterilized subassembled syringes ready for filling shall have been sterilized to a sterility assurance level (SAL) of 10^{-6} using a suitable validated sterilization method (see ISO 11135-1, ISO 17665-1, ISO 11137, or ISO 14937).

The sterilization process shall not compromise the safety and performance (i.e. changing of colours, dimensions, forms, closing or sealing, blooming or detachment of components, etc.) of the subassembled syringe. Sterility testing is subject of national or regional pharmacopoeias. See the methods given in Ph Eur, 2.6.1[27], USP <71>[34] and JP 4.06[44].

© ISO 2015 – All rights reserved
Copyright International Organization for Standardization
Provided by IHS Markit under license with ANSI
No reproduction or networking permitted without license from IHS
Licensee=Becton Dickinson - Loc 1 - 61, 64/5984713001, User=Chiu, Shelly
Not for Resale, 10/14/2019 19:10:41 MDT

For ethylene oxide sterilization, the requirements for residuals of ISO 10993-7 apply. See also Reference [26].

NOTE See also other applicable parts of ISO 10993.

6.3 Pyrogenicity/endotoxins

For pyrogenicity, the limit value for syringes shall be <0,25 EU/ml considering the nominal volume according to Table 1.

NOTE 1 For rationale, see USP monograph on sterile water for injection according to USP <1231>[41].

Extraction method and testing are specified in regional and national pharmacopoeias:

— for extraction method, see USP <161>[37];

— for testing, see Ph Eur, 2.6.14, method c)[28], USP <85>[35] and JP 4.01[43].

NOTE 2 A sample preparation is given in D.1. This is based on applicable pharmacopoeias.

The subassembled syringes ready for filling shall be processed to remove pyrogenic properties to ensure that they are suitable for their intended use. Such processes shall be validated for three log endotoxin reduction.

6.4 Particles

Sterilized subassembled syringes ready for filling shall be manufactured by processes that reduce the risk of particulate contamination.

Current pharmacopoeias identify visible particulates as undesirable but do not define the size or put a limit on the allowable number. It is recommended that the manufacturer and the customer agree upon the size and number of visible particles and the test method.

The particle-related specifications given in pharmacopoeias (e.g. Ph. Eur, USP, JP) do not apply to empty containers.

For sub-visible particles, the following applies:

— particles ≥10 µm: 600 max. per syringe;

— particles ≥25 µm: 60 max. per syringe.

NOTE 1 These limits have been derived from the USP <788>[40] (small volume parenterals) limit values for filled containers with a nominal volume of less than 100 ml. The limit of the subassembly, which is 10 % of the USP <788>[40], supports the customer to fulfil the USP requirements on the syringe system. This value has been chosen based on historical proven capability using the light obscuration method as given in D.2.

NOTE 2 See also Ph. Eur. 2.9.19 [29], Ph. Eur. 2.9.20 [30], USP <788>[40], JP 6.06[45], as well as JP 6.07[46].

6.5 Additional requirements to specific components of sterilized subassembled syringes ready for filling

6.5.1 Barrel

6.5.1.1 The requirements given in Clause 5 apply.

Specific design features of the glass barrel should be agreed between the manufacturer and the customer.

6.5.1.2 The inner surface of the syringe barrel may be lubricated. Limit values of the amount of lubricant are subject to agreement between the manufacturer and the customer.

© ISO 2015 – All rights reserved

Copyright International Organization for Standardization
Provided by IHS Markit under license with ANSI
No reproduction or networking permitted without license from IHS
Licensee=Becton Dickinson - Loc 1 - 61, 64/5984713001, User=Chiu, Shelly
Not for Resale, 10/14/2019 19:10:41 MDT

NOTE 1 Lubrication of the inner surface of the syringe barrel is applied in order to improve gliding properties. This is usually done by siliconization (e.g. by application of a high-viscosity silicone oil to the inner glass surface or with silicone emulsion followed by heat treatment).

If silicone oil is used, attention is drawn to applicable requirements in respective pharmacopoeias (see Reference [31] and Reference [42]).

NOTE 2 Annex E includes a suitable test method for the determination of the quality and consistency of the lubrication using a gliding force test.

NOTE 3 For test methods for verifying the internal siliconization and for defect evaluation list for tubing-glass receptacles, see Reference [25].

NOTE 4 The following are examples of test methods for visualization of the quality of the inner surface treatment:

— test method to check the homogeneity of the siliconization by using aluminium oxide powder or alternative powder of a defined quality; in this test, a defined powder is distributed within the syringe by shaking. Spots with no aluminium oxide or powder indicate insufficient siliconization;

— optical test methods.

6.5.1.3 When tested in combination with the selected piston/plunger in accordance with ISO 11040-5, the dead space in the barrel and the nozzle with the piston/plunger fully inserted shall be determined as given in ISO 7886-1:1993, Annex C.

NOTE The test method is a reference test to provide a consistent measure for comparison of the performance of different syringes and can potentially be used as a quality measure to assess changes and monitor production. It is not a design verification test intended to simulate the use condition of the syringe system.

6.5.2 Needle

6.5.2.1 If the sterilized subassembled syringe ready for filling is delivered with a staked needle, the requirements in 6.5.2.2 to 6.5.2.4 apply.

6.5.2.2 The needle shall fulfil the following material, dimensional, and design requirements:

— material and dimensions of the needle tubing shall comply with ISO 9626;

— bevel, dimensions, and bond between the glass and the needle shall comply with ISO 7864;

— actual needle length shall be in accordance with ISO 7864 (see *l* in ISO 7864:1993, Figure 1).

When there are particular requirements on needle tip height from the flange or the shoulder, which are both common when a syringe with staked needle is used in injectors, the dimension should be agreed upon between the manufacturer and the customer.

Specific design features of the needle should be agreed upon between the manufacturer and the customer.

6.5.2.3 The needle shall be surface-treated using a lubricant (e.g. silicone oil).

NOTE 1 This is to minimize the pain when the needle penetrates the skin during injection.

For silicone oil, attention is drawn to applicable requirements in respective pharmacopoeias (see Reference [31] and Reference [42]).

Limit values on needle penetration force might need to be established using a risk assessment and usability engineering process.

Needle penetration force measurements can be useful to detect needle point and lubrication defects, but might not be correlated with injection pain.

NOTE 2 A suitable test method for the determination of the needle penetration force is given in Annex F.

© ISO 2015 – All rights reserved
Copyright International Organization for Standardization
Provided by IHS Markit under license with ANSI
No reproduction or networking permitted without license from IHS
Licensee=Becton Dickinson - Loc 1 - 61, 64/5984713001, User=Chiu, Shelly
Not for Resale, 10/14/2019 19:10:41 MDT

6.5.2.4 The needle lumen patency shall be as specified in ISO 7864, if applicable.

6.5.2.5 The adhesive used for fixing the needle inside the glass cone shall fulfil the requirements of relevant pharmacopoeias and/or other national or regional requirements. See also ISO 10093-1 and UV curing liquid adhesive according to USP class V[36].

The fixation of the needle in the glass cone shall be tested in accordance with G.1. This test method does not specify a limit for the pull-out force because this is subject to agreement between the manufacturer and the customer. See also limit values specified in ISO 7864.

6.5.3 Closure system

6.5.3.1 The material that can contact the injectable product shall meet applicable requirements of ISO 8871-1. For additional regional or national requirements of pharmacopoeias, see type I or type II requirements of Ph. Eur. 3.2.9[33], USP <381>[38] and JP 7.03[48] that is applicable to volumes >100 ml.

6.5.3.2 The closure system shall allow for sterilization.

Compliance shall be demonstrated by suitable methods.

NOTE For ethylene oxide sterilization and/or steam sterilization, the design, including the material of the closure system, ensures that all components have sufficient ethylene oxide gas and water vapour permeation so that during sterilization, these gases reach both the cone of the Luer syringe and the needle through the sealing components.

6.5.3.3 The closure system shall provide an appropriate liquid leakage resistance when tested in accordance with G.2.

Limit values are subject to agreement between the manufacturer and the customer.

6.5.3.4 Luer conical fittings, if used, shall comply with ISO 594-1, ISO 594-2, and ISO 80369-1.

6.5.3.5 Luer lock adaptor (LLA) collar systems shall withstand a pull-off force of at least 22 N when tested in accordance with G.3.

NOTE This pull-off force is consistent with the minimum needle pull-off force as specified in ISO 7864, Table 2, for needles with an outer diameter of 0,5 mm and smaller.

6.5.3.6 Luer lock adaptor (LLA) collar systems shall withstand a specified torque resistance when tested in accordance with G.4.

The minimum torque resistance is subject to agreement between the manufacturer and the customer.

6.5.3.7 The design of closure systems shall be such that

— tip caps (if used) can be removed from the syringe with a reasonable torque,

— tip caps or needle shields (as applicable) can be removed from the syringe with a reasonable pull-off force, and

— tip caps or needle shields maintain the sterility of the cone or needle.

The maximum allowed torque and the pull-off force, respectively, shall be agreed upon between the manufacturer and the customer.

The test(s) shall be performed in accordance with G.5 and G.6, respectively.

© ISO 2015 – All rights reserved

Copyright International Organization for Standardization
Provided by IHS Markit under license with ANSI
No reproduction or networking permitted without license from IHS
Licensee=Becton Dickinson - Loc 1 - 61, 64/5984713001, User=Chiu, Shelly
Not for Resale, 10/14/2019 19:10:41 MDT

6.6 Closure system barrel integrity

The components of sterilized subassembled syringes ready for filling shall provide sealing against each other during filling, applicable final sterilizations (moist heat by autoclaving), and throughout storage and transport, also through or in different external air pressures.

The dye solution tightness test in Annex H is a valuable method to test the tightness of a sterilized subassembled syringe ready for filling in the design development phase.

7 Packaging

Non-sterile glass barrels shall be packed in plastic trays as agreed upon between the manufacturer and the customer.

For packaging systems for sterilized subassembled syringes ready for filling, see ISO 11040-7.

8 Labelling

For labelling of packaging for sterilized subassembled syringes ready for filling, see ISO 11040-7.

Labelling of packaging of bulkware is subject to agreement between the manufacturer and the customer.

© ISO 2015 – All rights reserved

Copyright International Organization for Standardization
Provided by IHS Markit under license with ANSI
No reproduction or networking permitted without license from IHS

Licensee=Becton Dickinson - Loc 1 - 61, 64/5984713001, User=Chiu, Shelly
Not for Resale, 10/14/2019 19:10:41 MDT

Annex A
(informative)

Examples of types of sterilized subassembled syringes ready for filling

A.1 Components

Figure A.1 a), Figure A.1 b), and Figure A.1 c) illustrate common components of sterilized subassembled syringes ready for filling.

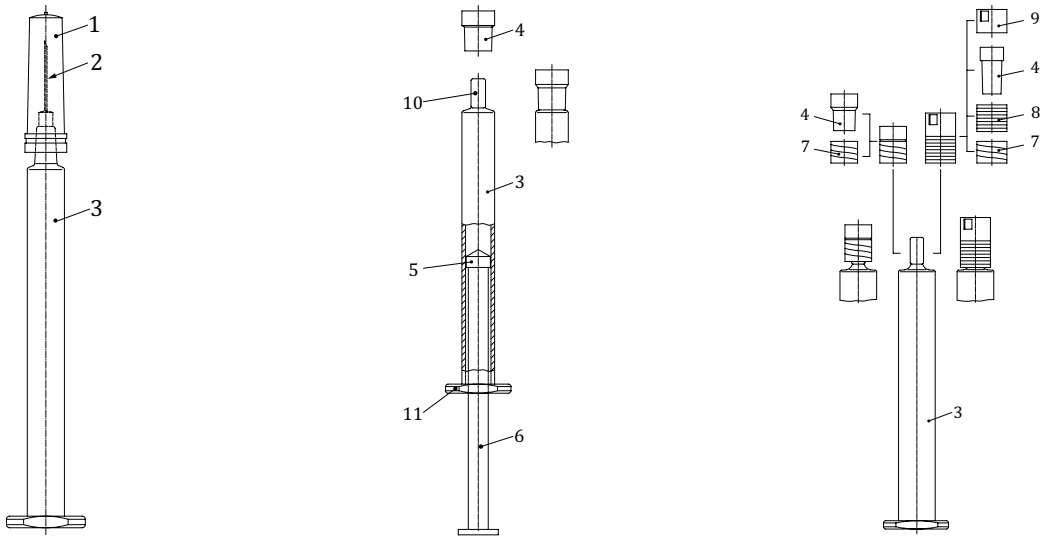

a) Syringe with staked needle **b) Syringe with Luer cone** **c) Syringe with Luer lock cone and Luer lock adaptor**

Key

1 needle shield
2 needle
3 syringe barrel
4 tip cap
5 plunger
6 plunger rod
7 Luer lock adaptor
8 rigid sleeve
9 protective tamper-evident cap
10 front end of the syringe
11 back end of the syringe

NOTE Plunger (5) and plunger rod (6) are not within the scope of this part of ISO 11040.

Figure A.1 — Examples of sterilized subassembled syringes ready for filling including components of closure systems

A.2 Description of closure systems

A.2.1 General

Closure components close the syringe such that the injectable product remains entirely enclosed and that microbiological contamination of the content of the syringe is avoided. The closure components

© ISO 2015 – All rights reserved

Copyright International Organization for Standardization
Provided by IHS Markit under license with ANSI
No reproduction or networking permitted without license from IHS
Licensee=Becton Dickinson - Loc 1 - 61, 64/5984713001, User=Chiu, Shelly
Not for Resale, 10/14/2019 19:10:41 MDT

are mounted onto the syringe body of the sterilized subassembled syringe ready for filling by the manufacturer. This subassembly is then packed in a suitable packaging system and then sterilized by ethylene oxide or another method.

The closure system can comprise of

— Luer cone, with or without lock, that can be closed using a tip cap, and

— needle and needle shield.

Examples are given in Figure A.1 a), Figure A.1 b), and Figure A.1 c).

A.2.2 Closures for syringes with Luer cone in accordance with ISO 594-1

Syringes with Luer cones are closed with a tip cap of an appropriate elastomeric material.

The seating of the tip cap is ensured by static friction between the female cone of the tip cap and the male cone of the glass syringe and can be improved by ceramic coating or roughening of the cone surface.

For schematic illustration, see Figure A.1 b).

A.2.3 Closures for syringes with Luer lock cone in accordance with ISO 594-2

Syringes with Luer lock cone are closed with a tip cap of an appropriate elastomeric material that is, after assembly with a plastic Luer lock adapter comprising a thread standardized in accordance with ISO 594-2, snapped onto the Luer cone of the syringe such that both parts together form the conical Luer lock.

If the closure/closure system is additionally intended to be prevented from falling off or from slipping, it is mounted into a plastic sleeve which is firmly connected with the Luer lock adapter. For simplicity, such closure systems which consist of the Luer lock adapter, the tip cap, and the plastic sleeve are pre-mounted and then snapped together onto the Luer cone of the syringe. This system ensures a safe closure of the syringe by means of the tip cap which is now held in place not just by friction forces but by form-locking.

These closure systems are available with or without tamper evidence in various designs.

For schematic illustration, see Figure A.1 c).

A.2.4 Syringe with staked needle

Syringes with a staked needle are closed with a needle shield.

It is important that the needle tip, and particularly the opening of this tip, is completely embedded into the elastomer of the needle shield to ensure sealing.

For schematic illustration, see Figure A.1 a).

© ISO 2015 – All rights reserved
Copyright International Organization for Standardization
Provided by IHS Markit under license with ANSI
No reproduction or networking permitted without license from IHS
Licensee=Becton Dickinson - Loc 1 - 61, 64/5984713001, User=Chiu, Shelly
Not for Resale, 10/14/2019 19:10:41 MDT

Annex B
(informative)

Head designs

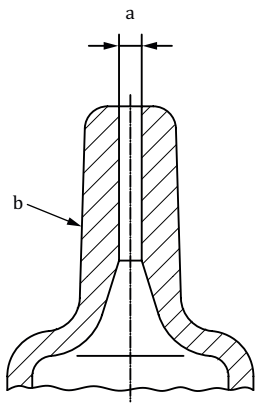

Key

a To be agreed upon between the manufacturer and the customer.

b Cone tolerance deviating from ISO 594-1 (see also 5.1).

NOTE Particular requirements on Luer tip height from the flange or shoulder, which both are common when a syringe is used in injectors, are subject to agreement between the manufacturer and the customer.

Figure B.1 — Model A: head design of a glass barrel with a 6 % Luer cone

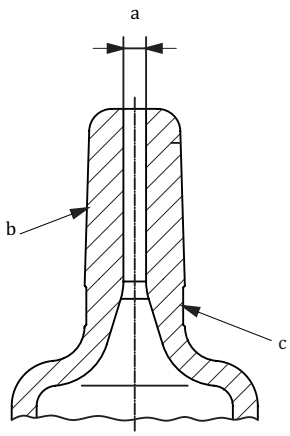

Key

a To be agreed upon between the manufacturer and the customer.

b Cone tolerance deviating from ISO 594-2 (see also 5.1).

c Undercut min. 0,03 mm, edges clear formed.

NOTE Particular requirements on Luer tip height from the flange or shoulder, which both are common when a syringe is used in injectors, are subject to agreement between the manufacturer and the customer.

Figure B.2 — Model B: head design of a glass barrel with a 6 % Luer cone for Luer lock

© ISO 2015 – All rights reserved

Copyright International Organization for Standardization
Provided by IHS Markit under license with ANSI
No reproduction or networking permitted without license from IHS
Licensee=Becton Dickinson - Loc 1 - 61, 64/5984713001, User=Chiu, Shelly
Not for Resale, 10/14/2019 19:10:41 MDT

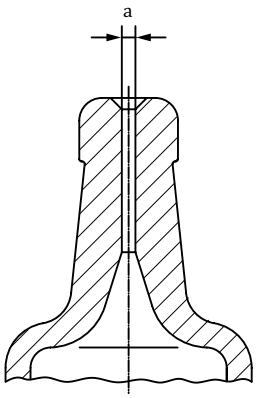

Key

a Depending on needle diameter.

Figure B.3 — Model C: head design of a glass barrel for syringe with staked needle

© ISO 2015 – All rights reserved
Copyright International Organization for Standardization
Provided by IHS Markit under license with ANSI
No reproduction or networking permitted without license from IHS
Licensee=Becton Dickinson - Loc 1 - 61, 64/5984713001, User=Chiu, Shelly
Not for Resale, 10/14/2019 19:10:41 MDT

Annex C
(normative)

Test methods for syringe barrels

C.1 Flange breakage resistance

C.1.1 Principle

The test is used to determine the flange breakage resistance by applying a force on a syringe barrel that has been placed in a cylinder holder under the flange.

C.1.2 Materials

C.1.2.1 Syringe barrels to be tested, numbers as required.

C.1.3 Apparatus

C.1.3.1 Universal tensile and compression testing machine, (attention shall be paid on bench overall rigidity for high-level resistance) complying with the following:

— load cell 2 500 N or as appropriate to the force to be measured;

— test speed of 100 mm/min or as appropriate;

— sampling rate of at least 100 Hz.

NOTE Definition of load cell, test speed, and sampling rate is subject to agreement between the manufacturer and the customer.

C.1.3.2 Syringe holder, made of an appropriate material [e.g. polyether ether ketone (PEEK)] and of appropriate dimensions.

NOTE Materials and design depend upon the intended use. This is subject to agreement between the manufacturer and the customer. Table C.1 and Figure C.1 include examples for dimensions of a syringe holder.

Table C.1 — Examples for dimensions of the syringe holder and loading pin

Dimensions in millimetres

Syringe barrel outer diameter	Diameter *A* (see Figure C.1)	Diameter *b* (see Figure C.2)	Radius *c* (see Figure C.2)
6,85	7,3	4	2
8,15	8,6	5	2,5
10,85	11,4	7	6
14,45	15,0	10	8
17,05	17,5	12	9
22,05	22,5	16	11

© ISO 2015 – All rights reserved

Copyright International Organization for Standardization
Provided by IHS Markit under license with ANSI
No reproduction or networking permitted without license from IHS
Licensee=Becton Dickinson - Loc 1 - 61, 64/5984713001, User=Chiu, Shelly
Not for Resale, 10/14/2019 19:10:41 MDT

Dimensions in millimetres

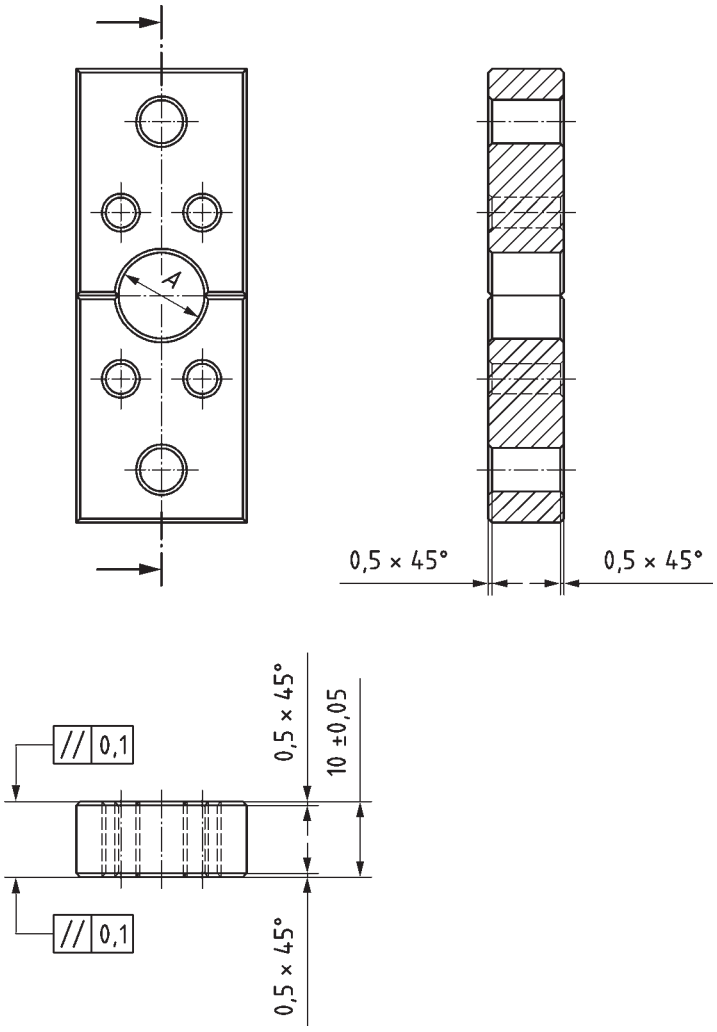

NOTE For diameter *A*, see Table C.1

Figure C.1 — Example of a syringe holder

C.1.3.3 Loading pin, made of an appropriate material and of appropriate dimensions.

NOTE 1 Materials and design (e.g. radius of curvature adjusted to the internal syringe shoulder design) depend upon the intended use. This is subject to the agreement between the manufacturer and the customer. Table C.1 and Figure C.2 include examples for dimensions of the loading pin.

NOTE 2 Polyacetale, shore hardness D according to ISO 7619-1 between 80 and 90 is a suitable material of the contact area of the loading pin. The rod can be made of stainless steel.

C.1.4 Preparation and preservation of test samples

Attention shall be paid not to shock the test samples before testing.

Inspect the syringe holder and the loading pin for damage prior to testing and change regularly.

C.1.5 Procedure

C.1.5.1 Place the syringe barrel to be tested in the syringe holder and position the loading pin close to the syringe barrel depth as illustrated in Figure C.2.

© ISO 2015 – All rights reserved
Copyright International Organization for Standardization
Provided by IHS Markit under license with ANSI
No reproduction or networking permitted without license from IHS
Licensee=Becton Dickinson - Loc 1 - 61, 64/5984713001, User=Chiu, Shelly
Not for Resale, 10/14/2019 19:10:41 MDT

Dimensions in millimetres

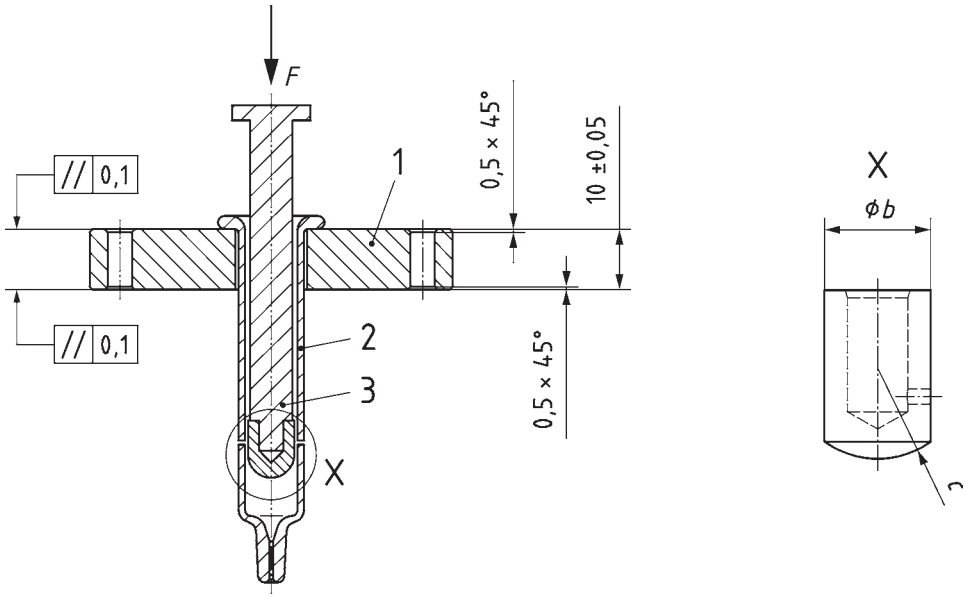

Key

1 syringe holder

2 syringe barrel

3 loading pin

NOTE For diameter *b* and radius *c*, see Table C.1.

Figure C.2 — Placement of the syringe barrel and the loading pin

C.1.5.2 Start the test by applying a test speed of 100 mm/min or as appropriate and a sampling rate of at least 100 Hz.

C.1.5.3 Record the force versus displacement and prepare a graph. An example is given in Figure C.3.

--`,,,,`,,,,,`,`,`,,,,,``,`-`-`,,`,,`,`,,`---

© ISO 2015 – All rights reserved

Copyright International Organization for Standardization
Provided by IHS Markit under license with ANSI
No reproduction or networking permitted without license from IHS

Licensee=Becton Dickinson - Loc 1 - 61, 64/5984713001, User=Chiu, Shelly
Not for Resale, 10/14/2019 19:10:41 MDT

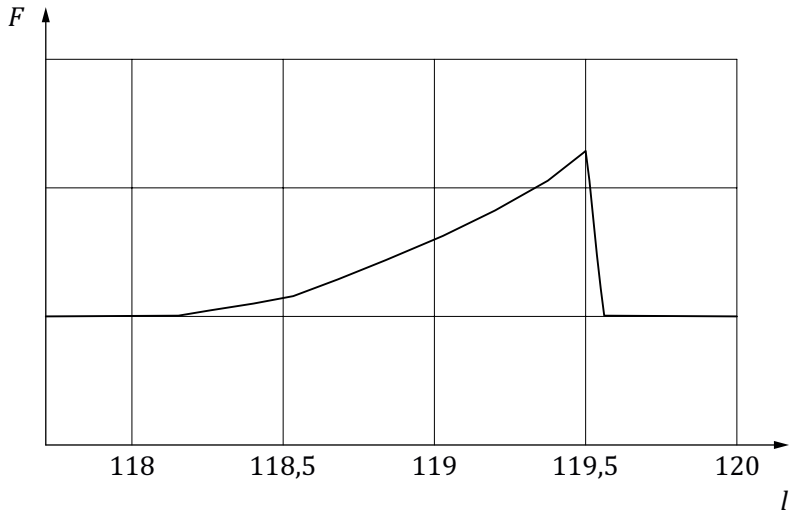

Key

F force in Newton

l distance in millimetre

Figure C.3 — Example of a force versus displacement curve

C.1.6 Expression of results

Determine the peak value from the displacement curve. This corresponds to the flange resistance (flange strength).

C.1.7 Test report

The test report shall include the following:

— the test speed (mm/min);

— the sampling rate (Hz);

— the peak value from the force versus displacement curve for each sample (N);

— the numbers of samples tested;

— any deviations or observations.

C.2 Luer cone breakage resistance

C.2.1 Principle

Many Luer syringes are equipped with a Luer lock connector. Especially for syringes for diluents or syringes for water for injections, the Luer connector is often used to connect to a vial adapter in order to provide a safe reconstitution of a lyophylised vial.

This subassembly (syringe barrel, vial adapter, and vial) is big in axial size and therefore, during reconstitution and handling charged by mechanical load through the user. The weakest point of this subassembly is the front end of the syringe that can be charged by a side load.

The Luer cone breakage resistance test is used to determine the strength of the cone that is determined by the geometry and glass characteristics like residual tension.

© ISO 2015 – All rights reserved
Copyright International Organization for Standardization
Provided by IHS Markit under license with ANSI
No reproduction or networking permitted without license from IHS
Licensee=Becton Dickinson - Loc 1 - 61, 64/5984713001, User=Chiu, Shelly
Not for Resale, 10/14/2019 19:10:41 MDT

The test can be used for an incoming goods inspection.

C.2.2 Materials

C.2.2.1 Luer syringe barrels to be tested, numbers as required.

C.2.3 Apparatus

C.2.3.1 Universal tensile and compression testing machine complying with the following:

— load cell appropriate to the force to be measured;

— test speed of 25 mm/min or as appropriate;

— sampling rate of at least 100 Hz.

NOTE Definition of load cell, test speed, and sampling is subject to agreement between the manufacturer and the customer.

C.2.3.2 Material holder and rod made of stainless steel, for dimensions, see Figure C.4.

Dimensions in millimetres

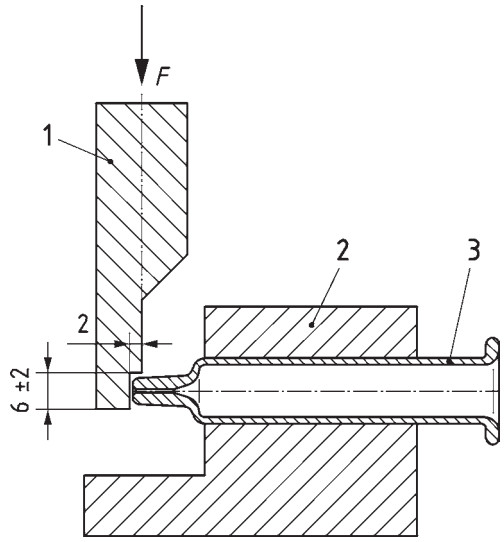

Key

1 compression testing machine with loading pin

2 syringe holder

3 syringe barrel

Figure C.4 — Example of a tensile and compression testing machine including holder with the syringe barrel inserted

C.2.3.3 Set of adapter parts that fit in to the syringe format geometry.

C.2.4 Procedure

C.2.4.1 Setup the test apparatus as follows:

— check the adapters for damage and correctness;

— assemble the adapters to the tensile and compression testing machine;

© ISO 2015 – All rights reserved

Copyright International Organization for Standardization
Provided by IHS Markit under license with ANSI
No reproduction or networking permitted without license from IHS
Licensee=Becton Dickinson - Loc 1 - 61, 64/5984713001, User=Chiu, Shelly
Not for Resale, 10/14/2019 19:10:41 MDT

— check for security elements, glass breakage will occur;

— install and open correct software to the tensile and compression testing machine, if required.

C.2.4.2 Perform the test as follows:

— place the syringe barrel in the tensile and compression testing machine (see Figure C.4);

— close the security elements;

— start the measurement applying a test speed of 25 mm/min, or as appropriate, and a sampling rate of at least 100 Hz;

— charge the syringe barrel until the cone breaks; apply the force at a distance of approximately 2 mm from the tip of the syringe barrel;

— remove the syringe barrel from the adapter;

— clean the adapter from glass residuals;

— make sure that it breaks at the tip.

C.2.5 Expression of results

Record the maximum force at which the Luer cone breaks.

C.2.6 Test report

The test report shall include the following:

— sampling rate (the higher the sampling rate, the more accurate the results) (Hz);

— test speed (mm/min);

— distance from the tip of the point where the syringe is charged (mm) (approximately 2 mm);

— maximum force at breakage (N);

— number of samples tested;

— any deviations or observations.

--`,,,,`,,,,,`,`,`,,,,,``,`--`,,`,`,`,,`---

© ISO 2015 – All rights reserved

Copyright International Organization for Standardization
Provided by IHS Markit under license with ANSI
No reproduction or networking permitted without license from IHS

Licensee=Becton Dickinson - Loc 1 - 61, 64/5984713001, User=Chiu, Shelly
Not for Resale, 10/14/2019 19:10:41 MDT

Annex D
(informative)

Sample preparation for endotoxin and particulate determination

D.1 Endotoxins

D.1.1 General

The sample preparation for endotoxin determination is based on the following documents:

— Guidance for industry, pyrogen and endotoxins testing, questions and answers [49];

— USP <161>[37];

— USP <85>[35];

— AAMI ST72:2011[23].

D.1.2 Materials and equipment

D.1.2.1 Sterilized syringes (i.e. sterilized by ethylene oxide or moist heat), not less than 3 and not more than 10 syringes.

D.1.2.2 Plunger stopper, endotoxin-free or has a vendor-certified maximum endotoxin level.

D.1.2.3 Endotoxin-free water of injection or *Limulus Amebocyte Lysate (LAL)* reagents, as extraction fluid having a temperature of (37 ± 1) °C or at least room temperature.

D.1.2.4 Shaker.

D.1.2.5 Endotoxin-free container.

D.1.3 Procedure

D.1.3.1 Protect the endotoxin-free container from environmental contamination until analysed, i.e. work in a controlled environment like ISO 5 according to ISO 14644-1.

D.1.3.2 Fill the syringes with extraction fluid up to the nominal fill volume of the syringe.

D.1.3.3 Close the syringes with the plunger stopper.

D.1.3.4 Store the filled and closed syringes for not less than 1 h at room temperature.

D.1.3.5 Shake the syringes vigorously for 10 min on a horizontal shaker (or similar device).

D.1.3.6 Pool the extract into an endotoxin-free container by pushing the plunger stopper and empty the syringes through the front end (Luer Cone, staked needle).

© ISO 2015 – All rights reserved

Copyright International Organization for Standardization
Provided by IHS Markit under license with ANSI
No reproduction or networking permitted without license from IHS
Licensee=Becton Dickinson - Loc 1 - 61, 64/5984713001, User=Chiu, Shelly
Not for Resale, 10/14/2019 19:10:41 MDT

D.1.3.7 Determine the number of endotoxin units (EU/ml) of the extract using the method as given in USP <85>[35] including "positive" and "negative" samples.

The limit of the extraction fluid can be calculated according to USP <161>[37] using Formula (D.1):

$$\frac{K \times N}{V} \tag{D.1}$$

where

K is the amount of endotoxin allowed per syringe;

N is the number of devices tested;

V is the total volume of extract rinse.

NOTE Ensure that the sensitivity of test reagent is high enough to allow a proper detection limit of endotoxins for pooled samples.

EXAMPLE For 1 ml nominal fill volume and an endotoxin limit <0,25 EU/ml and a sensitivity of the reagent of 0,02 EU/ml, the "alarm" limit for 10 pooled syringes would be 0,20 EU/ml which is <0,25 EU/ml.

D.2 Particulates

D.2.1 General

The sample preparation for endotoxin determination of particulates is based on USP <788>[40] and Ph. Eur. 2.9.19[29].

D.2.2 Materials and equipment

D.2.2.1 **Sterilized syringes** (i.e. sterilized by ethylene oxide or moist heat), numbers as required.

D.2.2.2 **Plunger stopper and plunger rod**, numbers as required.

D.2.2.3 **Water**, for injection or any grade of purified water.

D.2.2.4 **Container**.

D.2.3 Procedure

D.2.3.1 Protect the container from environmental contamination until analysed, i.e. work in a controlled environment, e.g. ISO 5 according to ISO 14644-1.

D.2.3.2 Prepare particle-free water by filtration of water for injection or any grade of purified water through a 0,2 µm to 0,8 µm filter unit.

D.2.3.3 Rinse all the needed equipment (e.g. beakers, dosage systems) with particle-free water.

D.2.3.4 Transfer a minimum of 30 ml of particle-free water into a cleaned container and let it rest undisturbed for a minimum of 2 min to allow degassing of air bubbles.

D.2.3.5 Determine the particle content of the particle-free water but disregard the first measurement as it is only used to clean the measurement system.

D.2.3.6 The limits for the particle-free water by light obscuration are

© ISO 2015 – All rights reserved
Copyright International Organization for Standardization
Provided by IHS Markit under license with ANSI
No reproduction or networking permitted without license from IHS
Licensee=Becton Dickinson - Loc 1 - 61, 64/5984713001, User=Chiu, Shelly
Not for Resale, 10/14/2019 19:10:41 MDT

— 10 particles ≥10 µm, and

— 2 particles ≥25 µm.

If the particle content is within the limit, continue with the sample preparation.

If the particle content is not within the limit, repeat the filtration and measurement until the particle-free water is within specification (D.2.3.2 to D.2.3.5).

D.2.3.7 Fill the syringes with nominal volume and close with clean plunger stopper.

D.2.3.8 Invert the syringes 20 times.

NOTE It can be necessary to agitate the solution more vigorously to suspend the particles properly.

D.2.3.9 Remove the tip cap/needle shield and dispense the contents of the syringes into a cleaned container by depressing the plunger with a plunger rod.

D.2.3.10 Let the solution rest un-disturbed for a minimum of 2 min to allow degassing of air bubbles.

D.2.3.11 Determine the particle content per syringe but disregard the first measurement as it is only used to clean the measurement system.

The limits for the containers by light obscuration are

— 600 particles ≥10 µm, and

— 60 particles ≥25 µm

NOTE A minimum pooled sample volume of 25 ml is needed to perform four runs of 5 ml each. The first run is always discarded. The average is calculated for the remaining three test runs. Depending on the nominal fill volume of the syringes, a certain amount of syringes is needed for 1 pool:

— 25 syringes 1ml 25ml pool;

— 13 syringes 2ml 25ml pool;

— 12 syringes 2,25ml 25ml pool;

— 9 syringes 3ml 25ml pool;

— 5 syringes 5ml 25ml pool.

To avoid air bubbles in the measuring device, it is recommended to add an extra 5 ml to the pool (30 ml pool volume).

Depending on the batch size of the syringes produced, multiple pools can be required.

© ISO 2015 – All rights reserved

Copyright International Organization for Standardization
Provided by IHS Markit under license with ANSI
No reproduction or networking permitted without license from IHS
Licensee=Becton Dickinson - Loc 1 - 61, 64/5984713001, User=Chiu, Shelly
Not for Resale, 10/14/2019 19:10:41 MDT

The number of particles in each container can be calculated using Formula (D.2):

$$\frac{P \times V_t}{V_a \times n} \tag{D.2}$$

where

P is the average particle count obtained from the portion of container;

V_t is the volume of pooled sample (ml);

V_a is the nominal volume of the syringe (ml);

N is the number of containers pooled.

© ISO 2015 – All rights reserved
Copyright International Organization for Standardization
Provided by IHS Markit under license with ANSI
No reproduction or networking permitted without license from IHS
Licensee=Becton Dickinson - Loc 1 - 61, 64/5984713001, User=Chiu, Shelly
Not for Resale, 10/14/2019 19:10:41 MDT

Annex E
(informative)

Glide force test method to evaluate syringe lubrication

E.1 Purpose

This test method is used to measure the gliding force of empty syringe barrels to assess the quality and consistency of silicone oil lubrication within the inner syringe barrel. The ability to assess the quality and consistency of silicone oil lubrication can be dependent on the test speed used.

NOTE Typically, a test speed of 100 mm/min (similar to ISO 7886-1) is used; however, it can be insufficient to detect lubrication defects. The test speed is subject to agreement between the manufacturer and the customer.

This test method applies to any siliconized, sterilized subassembled syringes ready for filling.

Break loose force is not part of this test method because break loose force is applicable to the syringe (complete system).

E.2 Materials

E.2.1 Empty sterilized subassembled syringes ready for filling, numbers as required.

E.2.2 Plunger stoppers (piston) in ready-to-use format, to be agreed upon between the manufacturer and the customer (dimensions, compound, siliconization level, sterilization).

E.2.3 Plunger rods, appropriate for use with selected plunger stopper, to be agreed upon between the manufacturer and the customer.

E.3 Apparatus

E.3.1 Universal tensile and compression testing machine complying with the following:

— test speed of 100 mm/min or as appropriate;

— force range up to 50 N or as appropriate.

NOTE Definition of test speed and force range is subject to agreement between the manufacturer and the customer.

E.3.2 Syringe support and syringe adaptor plates, appropriately sized for the sterilized subassembled syringes ready for filling to be tested.

E.3.3 Vent tube stoppering tool or machine.

E.4 Procedure

E.4.1 Set the plunger stopper in the empty syringe barrel by using the vent tube insertion method. Select stopper position(s) based on the following areas of concern:

© ISO 2015 – All rights reserved

Copyright International Organization for Standardization
Provided by IHS Markit under license with ANSI
No reproduction or networking permitted without license from IHS
Licensee=Becton Dickinson - Loc 1 - 61, 64/5984713001, User=Chiu, Shelly
Not for Resale, 10/14/2019 19:10:41 MDT

— focus on front portion of barrel; sensitive area for auto-injector performance: Select a position corresponding to 50 % of nominal fill volume (e.g. 27 mm from back of barrel flange to back of plunger stopper, 1 ml-long syringe);

— characterization of entire barrel: Select a position corresponding to nominal fill volume (e.g. 10 mm from back of barrel flange to back of plunger stopper, 1 ml-long syringe).

E.4.2 Install the plunger rod into or onto the plunger-stopper.

NOTE The plunger rod can be with or without thread.

E.4.3 Remove the needle shield or other front closure from the sterilized subassembled syringe ready for filling.

E.4.4 Place the sterilized subassembled syringe ready for filling in the adaptor plate on the force-measurement instrument.

E.4.5 Start the compression at the designated speed.

E.4.6 End the test when the plunger stopper comes into contact with the shoulder of the syringe barrel.

E.4.7 Repeat the steps E.4.1 to E.4.6 for additional test samples.

E.4.8 Record the maximum force in the glide force test region (see b in Figure E.1). The glide force test region is defined as the region between the break loose until the sharp increase of the force at the end of the stroke. See Figure E.1.

Limit values should be agreed between the manufacturer and the customer.

© ISO 2015 – All rights reserved
Copyright International Organization for Standardization
Provided by IHS Markit under license with ANSI
No reproduction or networking permitted without license from IHS
Licensee=Becton Dickinson - Loc 1 - 61, 64/5984713001, User=Chiu, Shelly
Not for Resale, 10/14/2019 19:10:41 MDT

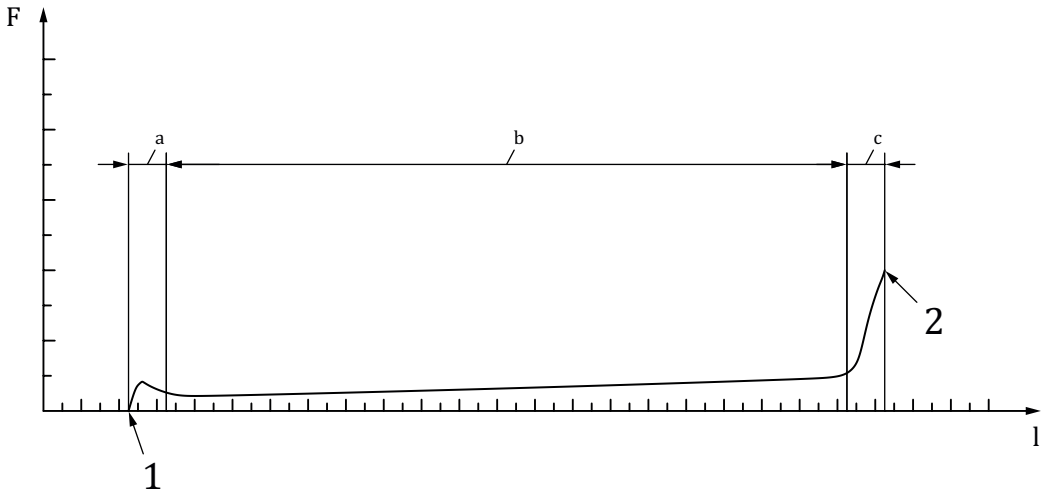

Key

1 start of stopper movement
2 end of testing condition
F force in Newton
l distance in millimetre
a break loose region
b glide force test region
c end of stroke region

Figure E.1 — Example illustrating gliding characteristics

E.5 Test report

The test report should include the following:

— maximum gliding force in the glide force test region (b) (N);

— calculated average gliding force (N);

— numbers of tested samples;

— any deviations or observations.

© ISO 2015 – All rights reserved

Copyright International Organization for Standardization
Provided by IHS Markit under license with ANSI
No reproduction or networking permitted without license from IHS
Licensee=Becton Dickinson - Loc 1 - 61, 64/5984713001, User=Chiu, Shelly
Not for Resale, 10/14/2019 19:10:41 MDT

Annex F
(informative)

Needle penetration test

F.1 Principle

This test method is used to determine the needle penetration force by piercing a test foil with a needle. The test has been derived from DIN 13097-4.

NOTE A test method on needle penetration is currently in preparation by ISO/TC 84. It is intended to harmonize this test method with that prepared by ISO/TC 84 when it becomes available.

F.2 Apparatus

F.2.1 Universal tensile and compression testing machine complying with the following:

— measuring range up to 50 N or as appropriate;

— test speed within the range 20 mm/min to 200 mm/min or as appropriate.

NOTE Definition of measuring range and test speed is subject to agreement between the manufacturer and the customer.

F.2.2 Needle holder.

F.3 Materials

F.3.1 Test foil, specification to be agreed upon between the manufacturer and the customer.

F.3.2 Needles and syringes with a staked needle as supplied or with pre-treatment, i.e. siliconized, (in accordance with ISO 9626), numbers as appropriate, to be agreed upon between the manufacturer and the customer.

F.4 Procedure

F.4.1 Fix the test foil tension-free in the holder.

F.4.2 Fix the needle in the needle holder perpendicular to the test foil and with the tip to the geometric centre of the free area of the test foil.

F.4.3 Start the test and penetrate the test foil with the needle.

F.4.4 Record the force versus displacement curve.

F.4.5 Use a new (not perforated) foil section for each penetration test.

Examples on penetration force behaviour and force versus displacement curve are given in Figure F.1 and Figure F.2.

© ISO 2015 – All rights reserved
Copyright International Organization for Standardization
Provided by IHS Markit under license with ANSI
No reproduction or networking permitted without license from IHS
Licensee=Becton Dickinson - Loc 1 - 61, 64/5984713001, User=Chiu, Shelly
Not for Resale, 10/14/2019 19:10:41 MDT

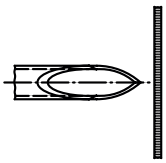	1. The needle tip meets the test foil.	
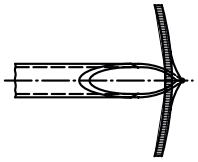	2. The tip presses the foil, the force increases to $F0$.	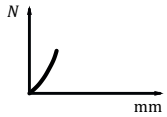
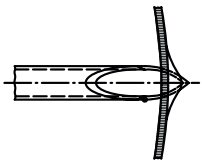	3. The tip penetrates the foil, the cutting phase starts.	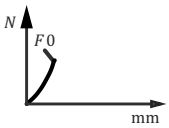
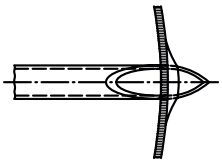	4. The cutting edges make the cut.	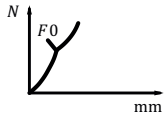
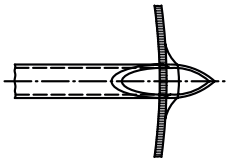	5. The cut is finished with the force maximum $F1$.	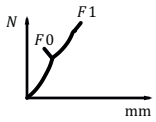
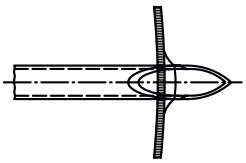	6. Dilatation of the cut via the primary bevel.	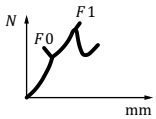
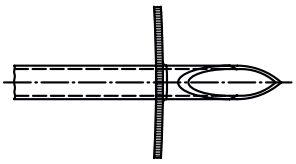	7. Heel passes the foil, the force with maximum $F2$.	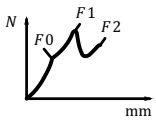
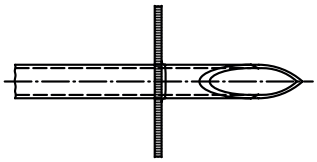	8. The needle tube slides through the enlarged cut.	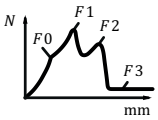

Figure F.1 — Stages of the penetration process

© ISO 2015 – All rights reserved

Copyright International Organization for Standardization
Provided by IHS Markit under license with ANSI
No reproduction or networking permitted without license from IHS
Licensee=Becton Dickinson - Loc 1 - 61, 64/5984713001, User=Chiu, Shelly
Not for Resale, 10/14/2019 19:10:41 MDT

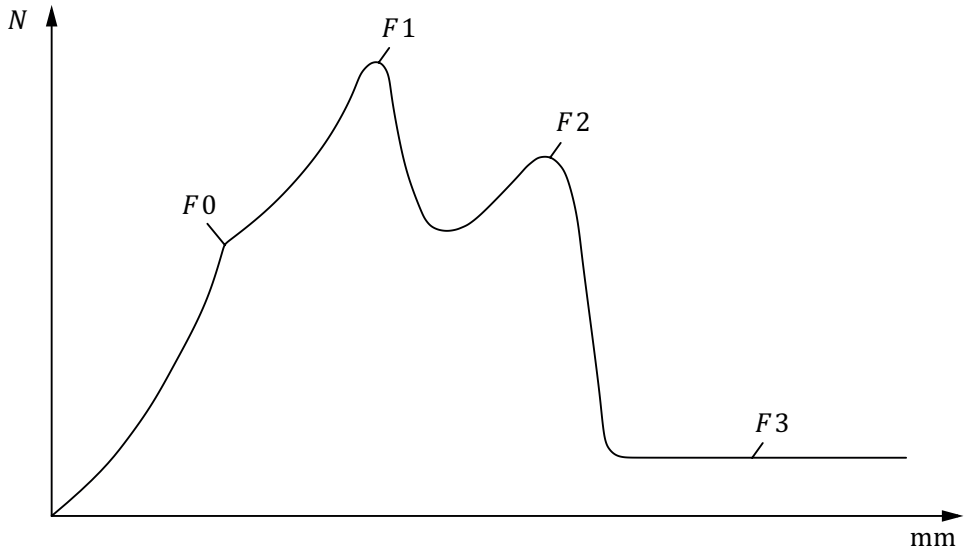

Key

*F*0 force for passing the tip (piercing force)

*F*1 force for cutting with the cutting edges (cutting force)

*F*2 force where the heel passes the foil

*F*3 drag penetration force

NOTE The given illustration is an example only. This curve might not be representative of all needles and test foils.

Figure F.2 — Example of a force versus displacement curve

F.5 Test report

The test report should include the following:

— specification of the test foil;

— test speed (mm/min);

— force versus displacement curves;

— numbers of tested samples;

— any deviations or observations.

© ISO 2015 – All rights reserved
Copyright International Organization for Standardization
Provided by IHS Markit under license with ANSI
No reproduction or networking permitted without license from IHS
Licensee=Becton Dickinson - Loc 1 - 61, 64/5984713001, User=Chiu, Shelly
Not for Resale, 10/14/2019 19:10:41 MDT

Annex G
(normative)

Test methods for closure systems

G.1 Needle pull-out force

G.1.1 Principle

The test is used to assess the fixation of the needle to the syringe.

It is mainly designed to verify whether the needle bonding process is appropriate to show that the staked needle withstands a needle size (gauge) dependent pull-out force according to ISO 7864.

G.1.2 Materials

G.1.2.1 Sterilized subassembled syringes ready for filling with a staked needle, numbers as required.

G.1.3 Apparatus

G.1.3.1 Universal tensile and compression testing machine complying with the following:

— load cell of max 500 N or as appropriate for the force to be measured;

— test speed of 50 mm/min or as appropriate;

— sampling rate of minimum 65 Hz.

NOTE Definition of load cell, test speed, and sampling rate is subject to agreement between the manufacturer and the customer.

G.1.3.2 Syringe holder (syringe can be fixed by shoulder or finger flange during testing).

G.1.3.3 Needle gripper device, designed to avoid slippage and to avoid an influence on the measurement itself.

G.1.4 Preparation and preservation of test samples

The test samples shall follow the same process as the product delivered.

G.1.5 Procedure

G.1.5.1 Insert the test sample vertically positioned on the testing machine (see Figure G.1).

© ISO 2015 – All rights reserved

Copyright International Organization for Standardization
Provided by IHS Markit under license with ANSI
No reproduction or networking permitted without license from IHS
Licensee=Becton Dickinson - Loc 1 - 61, 64/5984713001, User=Chiu, Shelly
Not for Resale, 10/14/2019 19:10:41 MDT

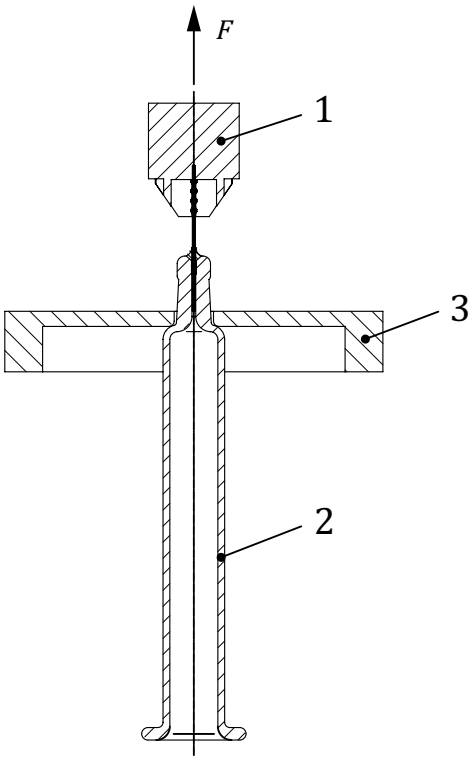

Key

1 needle gripper attached to a testing machine

2 syringe with staked needle

3 syringe holder/base plate

Figure G.1 — Position of the test sample in the tensile testing machine

G.1.5.2 Grip as much as possible of the needle to avoid slippage.

G.1.5.3 Release the test sample.

G.1.5.4 Set the load cell to “zero”. Attention shall be paid that no significant pre-load is applied when the “zero” is set.

G.1.5.5 Apply a test speed of 50 mm/min or as appropriate, at an appropriate sampling rate [Hz].

G.1.5.6 Start the test.

G.1.5.7 Record the force versus displacement.

G.1.5.8 Stop the test once the needle is clearly removed from the syringe or broken.

G.1.6 Expression of results

Record the maximum load peak from the force versus displacement curve. This corresponds to the pull-out force of the needle system of the syringe.

© ISO 2015 – All rights reserved
Copyright International Organization for Standardization
Provided by IHS Markit under license with ANSI
No reproduction or networking permitted without license from IHS
Licensee=Becton Dickinson - Loc 1 - 61, 64/5984713001, User=Chiu, Shelly
Not for Resale, 10/14/2019 19:10:41 MDT

G.1.7 Test report

The test report shall include the following:

— test speed (mm/min);

— sampling rate (Hz);

— force versus displacement curve;

— peak value according to the maximum force (N);

— number of tested samples;

— any deviations or observations.

G.2 Closure system liquid leakage test

G.2.1 Principle

The test is used to assess the liquid leakage resistance of the closure systems (needle shield or tip cap/barrel assembly).

It is mainly designed to verify whether the closure system is able to withstand any potential overpressure inside the syringe during the filling process or during transportation.

The test pressure of 110 kPa has been selected based on process conditions during the fill finish process.

G.2.2 Reagents and materials

G.2.2.1 Reagents of recognized analytical grade and distilled water or water of equivalent purity.

G.2.2.2 Sterilized subassembled syringes ready for filling, numbers as required.

G.2.3 Apparatus

G.2.3.1 Universal tensile and compression testing machine or pressurization through the application of compressed air.

NOTE Application of pressure via universal tensile and testing machine [(see Figure G.2 a)] is preferred when wall friction can be neglected. In this case, it is assumed that equilibrium is reached between the applied force and the internal pressure. If wall friction cannot be neglected, preference is given to the test as indicated in Figure G.2 b) where the pressures are applied on the closure system through the application of compressed air on the filled media.

G.2.3.2 Syringe holder.

G.2.3.3 Piston and piston rod.

G.2.4 Preparation and preservation of test samples

The retention time/waiting time between closure setting and leakage testing shall be at least 12 h. Attention shall be paid not to damage and/or loosen the closure system/syringe tip prior to testing.

G.2.5 Procedure

G.2.5.1 Insert the test sample into the holder. See Figure G.2.

--`,,,`,,,,,`,`,`,,,,,`,`,`,,,,`,`-`-`,,`,,`,`,,`---

© ISO 2015 – All rights reserved

Copyright International Organization for Standardization
Provided by IHS Markit under license with ANSI
No reproduction or networking permitted without license from IHS
Licensee=Becton Dickinson - Loc 1 - 61, 64/5984713001, User=Chiu, Shelly
Not for Resale, 10/14/2019 19:10:41 MDT

G.2.5.2 Fill the test sample to between 1/3 and 2/3 of the nominal fill volume with the reagent (see G.2.2.1).

G.2.5.3 In case of pressurization, close the holder with the lid and secure the device.

G.2.5.4 Apply a pressure of 110 kPa and hold the pressure for 5 s.

The correlation between the test force and the cross-sectional area of the syringe that is determined by the nominal inner diameter of the syringe can be calculated using Formula (G.1), Formula (G.2), and Formula (G.3) (see also Table G.1):

from

$$F = p \times A \tag{G.1}$$

and

$$A = \frac{\pi}{4} \times d^2 \tag{G.2}$$

follows

$$F = p \times \frac{\pi}{4} \times d^2 \times 10^{-3} \tag{G.3}$$

where

F is the force in Newton;

p is the target internal pressure (kPa) (i.e. 110 kPa);

A is the cross-sectional area of the syringe barrel (mm^2);

d is the nominal inner diameter of the syringe barrel (mm).

Table G.1 — Correspondence between the inner diameter of the syringe barrel and the test force

Nominal volume of the syringe barrel ml	**Nominal inner diameter of the syringe barrel** mm	**Calculated test force**[a] N
0,5	4,65	1,87
1	6,35	3,48
1 to 3 (short/standard)	8,65	6,46
5	11,85	12,13
10	14,25	17,54
20	19,05	31,35

[a] Calculated for the target internal pressure of 110 kPa.

G.2.5.5 Release the pressure.

G.2.5.6 Monitor the test samples for leakage during and after the test.

G.2.6 Expression of results

The test is passed if the tip caps are not falling off and/or if no droplets are visible around the external surfaces of the closure system (wet surface of tip cap or needle shield).

© ISO 2015 – All rights reserved
Copyright International Organization for Standardization
Provided by IHS Markit under license with ANSI
No reproduction or networking permitted without license from IHS
Licensee=Becton Dickinson - Loc 1 - 61, 64/5984713001, User=Chiu, Shelly
Not for Resale, 10/14/2019 19:10:41 MDT

Visually examine if the test samples have passed or failed the test.

G.2.7 Test report

The test report shall include the following:

— applied pressure (kPa) or force (N);

— number of tested samples;

— number of passed/failed samples according to specification;

— any deviations or observations.

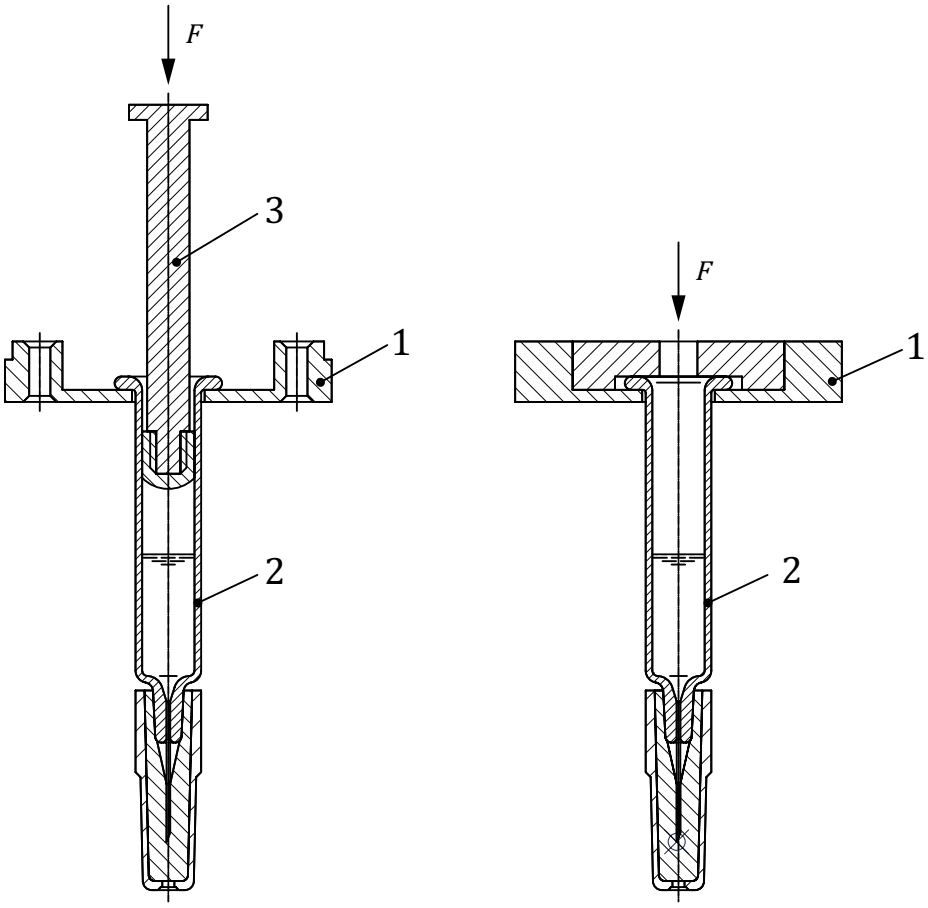

a) pressure applied via piston rod and piston through a tensile testing machine

b) pressure supplied by compressed air directly on filled media

Key

1 syringe holder

2 syringe with closure system

3 piston rod and piston

NOTE This illustration includes a syringe with a needle shield as an example. The testing is equally applicable to syringes with a tip cap.

Figure G.2 — Examples of testing devices for the determination of closure system liquid leakage

© ISO 2015 – All rights reserved

Copyright International Organization for Standardization
Provided by IHS Markit under license with ANSI
No reproduction or networking permitted without license from IHS
Licensee=Becton Dickinson - Loc 1 - 61, 64/5984713001, User=Chiu, Shelly
Not for Resale, 10/14/2019 19:10:41 MDT

G.3 Luer lock adaptor collar pull-off force

G.3.1 Principle

The test is used to assess the pull-off force of a Luer lock adaptor (LLA) collar system of sterilized subassembled syringes ready for filling.

It is mainly designed to verify whether the LLA collar system is able to withstand an axial pull-off force in order to avoid detachment of the LLA collar system from the syringe barrel by the insertion of a female 6 % (Luer) conical lock fitting.

G.3.2 Materials

G.3.2.1 Sterilized subassembled syringes ready for filling with LLA, number as required.

G.3.3 Apparatus

G.3.3.1 Universal tensile and compression testing machine complying with the following:

— test speed of 20 mm/min or as appropriate (see ISO 594-2);

— load cell appropriate to the force to be measured, typical range of load cell is between 10 N and 100 N;

— sampling rate of at least 65 Hz.

NOTE Definition of load cell, test speed, and sampling rate is subject to agreement between the manufacturer and the customer.

G.3.3.2 Syringe holder (see Figure G.3) and gripper device.

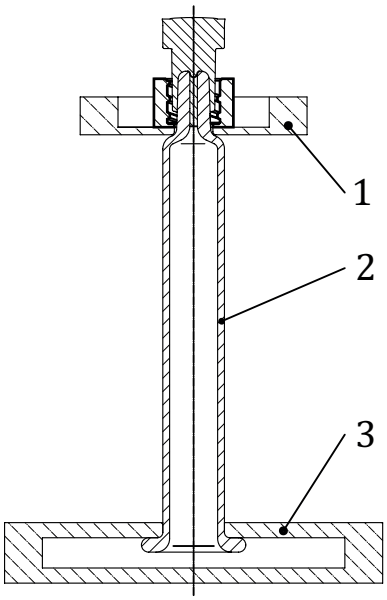

Key

1 LLA gripper plate

2 syringe with LLA/LLA systems

3 syringe holder/base plate

Figure G.3 — Example of a testing device for the determination of the Luer lock adapter collar pull-off force

© ISO 2015 – All rights reserved
Copyright International Organization for Standardization
Provided by IHS Markit under license with ANSI
No reproduction or networking permitted without license from IHS
Licensee=Becton Dickinson - Loc 1 - 61, 64/5984713001, User=Chiu, Shelly
Not for Resale, 10/14/2019 19:10:41 MDT

G.3.4 Preparation and preservation of test samples

The test samples shall follow the same process as the product delivered.

G.3.5 Procedure

G.3.5.1 Remove the tip cap.

G.3.5.2 Insert the test sample vertically positioned on the testing machine between the holder (finger flange side) and the gripper (LLA collar side).

G.3.5.3 Make sure that no pressure/movement is applied to the LLA collar system during test assembling.

G.3.5.4 Release the test sample.

G.3.5.5 Set the load cell to “zero”. Attention shall be paid that no significant pre-load is applied when “zero” is set.

G.3.5.6 Apply a test speed of 20 mm/min or as appropriate at an appropriate sampling rate.

G.3.5.7 Record the force versus displacement.

G.3.5.8 Stop the test once the LLA collar system is clearly removed from the syringe tip.

G.3.6 Expression of results

Determine the load peak from the force versus displacement curve. The peak value corresponds to the pull-off force of the LLA collar system of the syringe.

G.3.7 Test report

The test report shall include the following:

— sampling rate (Hz);

— test speed (mm/min);

— peak value (pull-off force) (N);

— number of tested samples;

— number of passed/failed samples according to specification;

— any deviations or observations.

G.4 Luer lock adaptor collar torque resistance

G.4.1 Principle

The test is used to assess the torque resistance of a LLA collar system of a sterilized subassembled syringe ready for filling.

It is mainly designed to verify whether the LLA collar system is able to withstand an applied torque while inserting a female 6 % (Luer) conical lock fitting (i.e. needle hub).

© ISO 2015 – All rights reserved

Copyright International Organization for Standardization
Provided by IHS Markit under license with ANSI
No reproduction or networking permitted without license from IHS
Licensee=Becton Dickinson - Loc 1 - 61, 64/5984713001, User=Chiu, Shelly
Not for Resale, 10/14/2019 19:10:41 MDT

G.4.2 Materials

G.4.2.1 Sterilized subassembled syringes ready for filling with LLA, number as required.

G.4.3 Apparatus

G.4.3.1 Torque tester combined with a rotation device (see Figure G.4) complying with the following:

— torque cell 35 Ncm with 0,05 Ncm resolution or as appropriate to the torque to be measured;

— sampling rate of at least 65 Hz;

— rotation speed of 20 r/min or as appropriate.

NOTE 1 Definition of torque cell, sampling rate, and test speed is subject to agreement between the manufacturer and the customer.

NOTE 2 For this test, either the syringe barrel or the closure can be rotated.

G.4.3.2 Adapter: LLA collar gripper.

G.4.3.3 Syringe holder (rotatable, if this alternative is used).

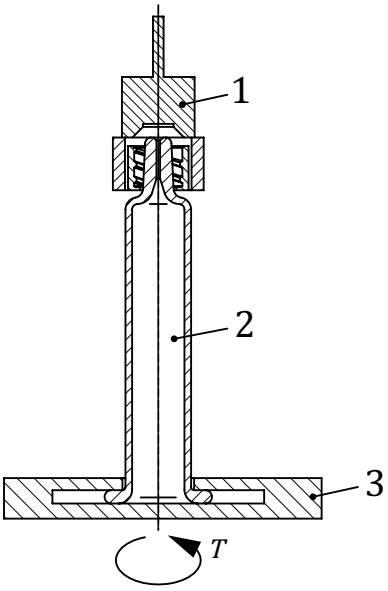

Key

1 LLA gripper inclusive torque sensor

2 syringe with LLA

3 syringe holder/base plate (rotatable)

NOTE For this test, either the syringe barrel or the closure can be rotated.

Figure G.4 — Example of testing device for the determination of the Luer lock adapter collar torque resistance, with rotatable syringe holder

G.4.4 Preparation and preservation of test samples and test pieces

The test samples shall follow the same process as the product delivered.

© ISO 2015 – All rights reserved
Copyright International Organization for Standardization
Provided by IHS Markit under license with ANSI
No reproduction or networking permitted without license from IHS
Licensee=Becton Dickinson - Loc 1 - 61, 64/5984713001, User=Chiu, Shelly
Not for Resale, 10/14/2019 19:10:41 MDT

G.4.5 Procedure

G.4.5.1 Insert the test sample vertically positioned into the syringe holder of the testing device. See Figure G.4.

G.4.5.2 Remove the tip cap.

NOTE This can be done manually.

G.4.5.3 Mount the adapter onto the LLA collar.

G.4.5.4 Set the torque cell to “zero”. Attention shall be paid that no significant pre-torque is applied.

G.4.5.5 Set the rotation speed at 20 rotations per minute or as appropriate.

G.4.5.6 Start the test by either rotating the turntable 90° clockwise or counter clockwise, depending on the system. Alternatively, rotate the closure.

G.4.5.7 Record the peak of the applied torque.

G.4.6 Expression of results

Record the maximum torque peak. This corresponds to the torque where the LLA collar starts to rotate on the syringe.

G.4.7 Test report

The test report shall include the following:

— rotation speed (°/s or r/min);

— sampling rate (Hz);

— maximum torque (Ncm);

— number of tested samples;

— number of passed/failed samples according to specification;

— any deviations or observations.

G.5 Luer lock rigid tip cap unscrewing torque

G.5.1 Principle

The test is used to assess the torque of a rigid tip cap of a sterilized subassembled syringe ready for filling.

It is mainly designed to verify whether the rigid tip cap can be removed from the syringe with a reasonable torque.

G.5.2 Materials

G.5.2.1 **Sterilized subassembled syringes ready for filling with a tip cap**, numbers as required.

© ISO 2015 – All rights reserved

Copyright International Organization for Standardization
Provided by IHS Markit under license with ANSI
No reproduction or networking permitted without license from IHS
Licensee=Becton Dickinson - Loc 1 - 61, 64/5984713001, User=Chiu, Shelly
Not for Resale, 10/14/2019 19:10:41 MDT

G.5.3 Apparatus

G.5.3.1 Torque tester combined with a rotation device complying with the following:

— torque cell 35 Ncm with 0,05 Ncm resolution or as appropriate to the torque to be measured;

— sampling rate of at least 65 Hz;

— rotation speed of 20 r/min or as appropriate.

NOTE 1 Definition of torque cell, sampling rate, and rotation speed is subject to agreement between the manufacturer and the customer.

NOTE 2 For this test, either the syringe barrel or the closure can be rotated.

G.5.3.2 Adapter: tip cap gripper.

G.5.3.3 Syringe holder (rotatable, if this alternative is used).

G.5.4 Preparation and preservation of test samples and test pieces

The test samples shall follow the same process as the product delivered.

G.5.5 Procedure

G.5.5.1 Insert the test sample vertically positioned into the syringe holder of the testing device (see Figure G.5).

G.5.5.2 Mount the adapter onto the tip cap.

G.5.5.3 Set the torque cell to “zero”. Attention shall be paid that no significant pre-torque is applied.

G.5.5.4 Set the rotation speed at 20 r/min or as appropriate.

G.5.5.5 Start the test by either rotating the turntable 90° clockwise or counter clockwise depending on system. Alternatively, rotate the closure.

G.5.5.6 Record the peak load of the applied torque.

G.5.6 Expression of results

Record the maximum torque peak. This corresponds to the torque where the tip cap starts to rotate on the syringe.

G.5.7 Test report

The test report shall include the following:

— rotation speed (°/s or r/min),

— sample rate (Hz);

— maximum torque (N·cm);

— number of tested samples;

— number of passed/failed samples according to specification;

--`,,,,`,,,,,`,`,`,,,,,`,`,`,`,,`,`---

© ISO 2015 – All rights reserved
Copyright International Organization for Standardization
Provided by IHS Markit under license with ANSI
No reproduction or networking permitted without license from IHS
Licensee=Becton Dickinson - Loc 1 - 61, 64/5984713001, User=Chiu, Shelly
Not for Resale, 10/14/2019 19:10:41 MDT

— any deviations or observations.

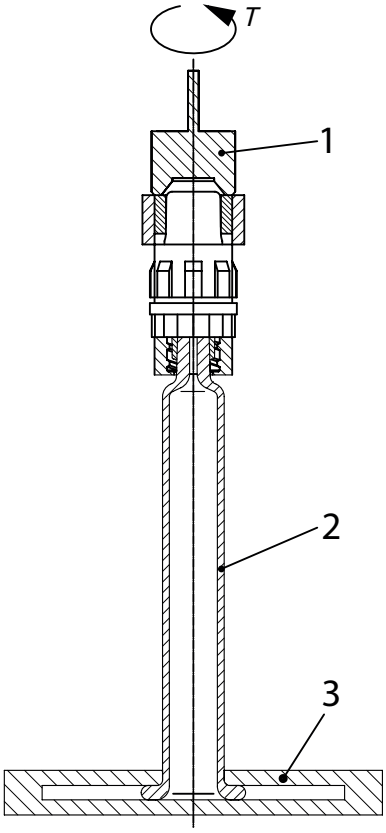

Key

1 gripper inclusive torque sensor

2 syringe with tip cap

3 syringe holder/base plate (rotatable)

NOTE For this test, either the syringe or the closure can be rotated.

Figure G.5 — Example of a testing device for the determination of the Luer lock rigid tip cap removal unscrewing torque

G.6 Pull-off force of the tip cap or the needle shield

G.6.1 Method 1

G.6.1.1 Principle

This test is used to assess the removal force of the tip cap or the needle shield of a sterilized subassembled syringe ready for filling.

This method can be customized depending on the intended use of the syringe (e.g. manual use, use in an auto-injector). An alternative procedure is described in G.6.2.

G.6.1.2 Materials

G.6.1.2.1 Sterilized subassembled syringes ready for filling, numbers as required.

© ISO 2015 – All rights reserved

Copyright International Organization for Standardization
Provided by IHS Markit under license with ANSI
No reproduction or networking permitted without license from IHS
Licensee=Becton Dickinson - Loc 1 - 61, 64/5984713001, User=Chiu, Shelly
Not for Resale, 10/14/2019 19:10:41 MDT

G.6.1.3 Apparatus

G.6.1.3.1 Universal tensile and compression testing machine complying with the following:

— load cell 50 N to 100 N, appropriate to the force to be measured;

— sampling rate of at least 40 Hz;

— test speed between 100 mm/min and 1 000 mm/min or as appropriate.

NOTE Definition of load cell, sampling rate, and test speed is subject to agreement between the manufacturer and the customer.

G.6.1.3.2 Syringe holder.

G.6.1.3.3 Tip cap/needle shield gripper.

G.6.1.4 Procedure

G.6.1.4.1 Position the test sample vertically with the closure oriented upwards see Figure G.6.

G.6.1.4.2 Apply the grip pressure such that the grip does not slide against or distort/deform the closure system.

G.6.1.4.3 With the syringe otherwise unconstrained, set the load cell to “zero”.

G.6.1.4.4 Position the syringe holder such that the syringe will be captured by the holder when an axial tension force is applied.

G.6.1.4.5 Apply a sampling rate of at least 40 Hz.

G.6.1.4.6 Set the bench displacement rate between 100 mm/min and 1 000 mm/min or as appropriate.

G.6.1.4.7 Record the force versus displacement.

G.6.1.4.8 Stop the test once the closure system is completely removed from the syringe tip.

G.6.1.5 Expression of results

The closure system (tip cap /needle shield) pull-out force corresponds to the maximum load recorded in the force versus displacement curve.

G.6.1.6 Test report

The test report shall include the following:

— sampling rate (Hz);

— test speed (mm/min);

— load cell (N);

— maximum load recorded in the force versus displacement curve (N);

— number of tested samples;

— any deviations or observations.

--`,,,,`,,,,,`,`,`,,,,,```,-`-`,,`,,`,`,,`---

© ISO 2015 – All rights reserved
Copyright International Organization for Standardization
Provided by IHS Markit under license with ANSI
No reproduction or networking permitted without license from IHS
Licensee=Becton Dickinson - Loc 1 - 61, 64/5984713001, User=Chiu, Shelly
Not for Resale, 10/14/2019 19:10:41 MDT

Dimensions in millimetres

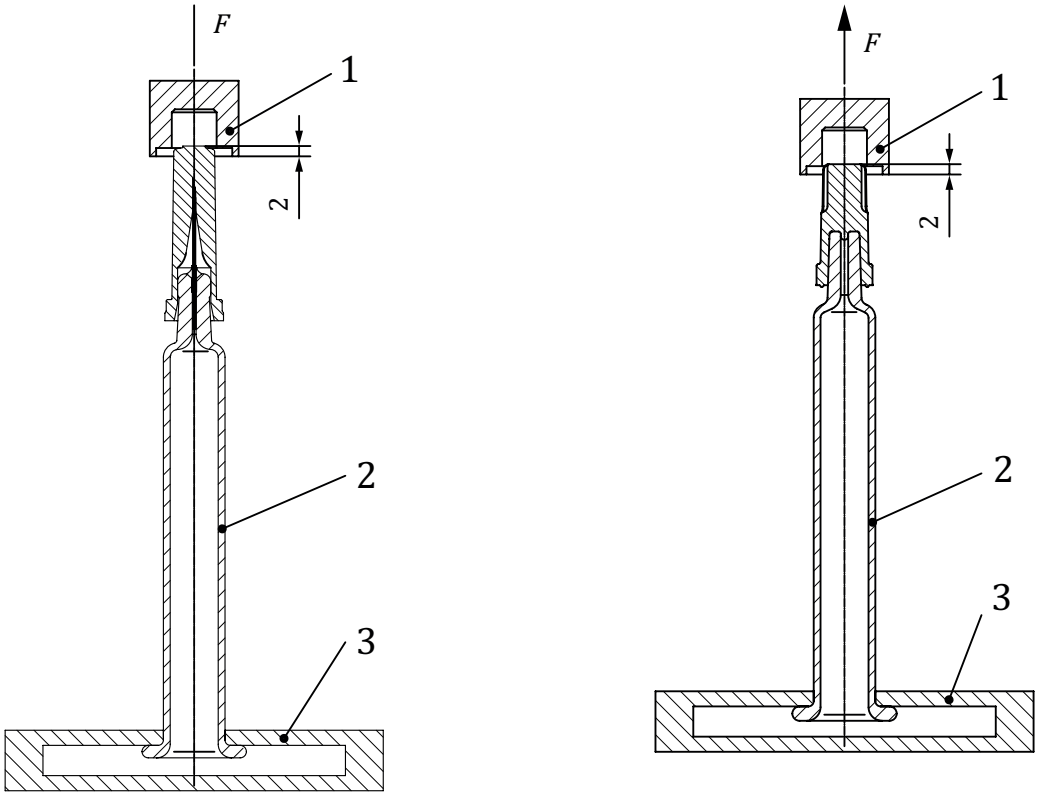

a) syringe with needle shield **b) syringe with tip cap**

Key

1 gripper attached to tensile testing machine

2 syringe with needle shield/tip cap

3 syringe holder/base plate

Figure G.6 — Examples of testing devices for the determination of the pull-off force of the tip cap or the needle shield – Method 1

G.6.2 Method 2

G.6.2.1 Principle

This test is used to assess the removal force of the tip cap or the needle shield of a sterilized subassembled syringe ready for filling.

This test allows the pull-out force to be evaluated without pinching the needle shield and/or the needle. It prevents deformation of the rubber part.

An alternative procedure is described in G.6.1.

G.6.2.2 Materials

G.6.2.2.1 Sterilized subassembled syringes ready for filling, numbers as required.

G.6.2.3 Apparatus

G.6.2.3.1 Universal tensile testing and compression machine complying with the following:

© ISO 2015 – All rights reserved

Copyright International Organization for Standardization
Provided by IHS Markit under license with ANSI
No reproduction or networking permitted without license from IHS
Licensee=Becton Dickinson - Loc 1 - 61, 64/5984713001, User=Chiu, Shelly
Not for Resale, 10/14/2019 19:10:41 MDT

— load cell up to 500 N;

— sampling rate as appropriate;

— test speed as appropriate.

NOTE Definition of load cell, sampling rate, and test speed is subject to agreement between the manufacturer and the customer.

G.6.2.3.2 Pulling device, see Figure G.7.

G.6.2.4 Procedure

G.6.2.4.1 Position the test sample vertically, syringe flange, and tip cap or needle-shield in their respective holder.

G.6.2.4.2 Release the test sample.

G.6.2.4.3 Set the load cell to “zero”. Attention shall be paid that no significant pre-load is applied when “zero” is set.

G.6.2.4.4 Start the test.

G.6.2.4.5 Record the force versus displacement.

G.6.2.4.6 Stop the test once the closure is removed from the tip of the syringe.

G.6.2.5 Test report

The test report shall include the following:

— load cell (N);

— test speed (mm/min);

— sampling rate (Hz);

— mean, minimum, and maximum value recorded in the force versus displacement curve (N);

— number of tested samples;

— any deviations or observations.

© ISO 2015 – All rights reserved
Copyright International Organization for Standardization
Provided by IHS Markit under license with ANSI
No reproduction or networking permitted without license from IHS
Licensee=Becton Dickinson - Loc 1 - 61, 64/5984713001, User=Chiu, Shelly
Not for Resale, 10/14/2019 19:10:41 MDT

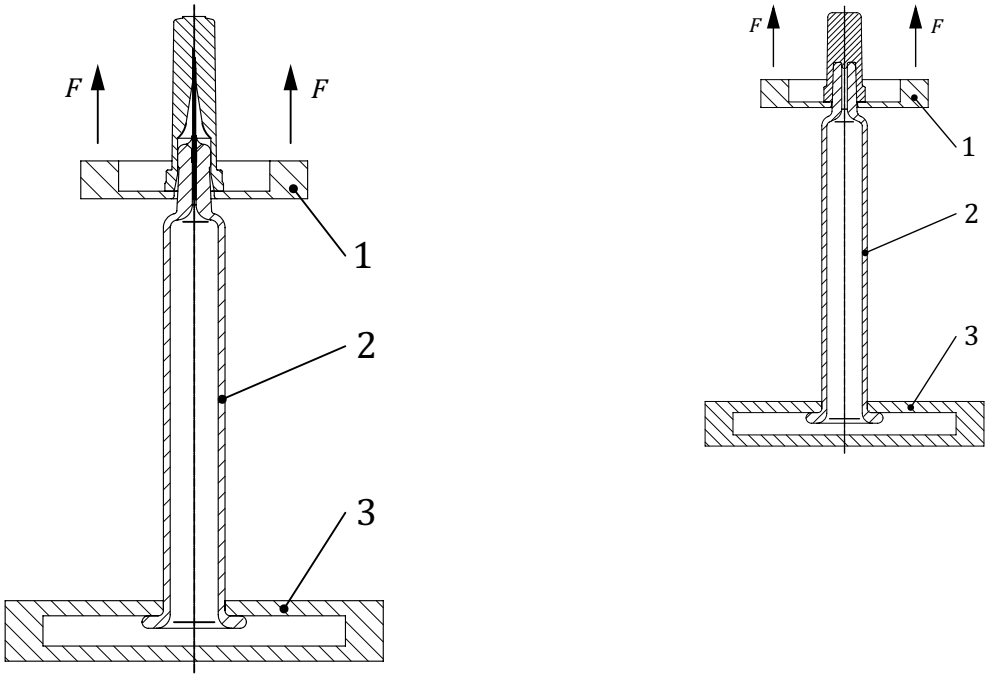

a) syringe with needle shield **b) syringe with tip cap**

Key

1 pull-off device attached to tensile testing machine

2 syringe with needle shield/tip cap

3 syringe holder/base plate

Figure G.7 — Examples of testing devices for the determination of the pull-off force of the tip cap or the needle shield – Method 2

© ISO 2015 – All rights reserved

Copyright International Organization for Standardization
Provided by IHS Markit under license with ANSI
No reproduction or networking permitted without license from IHS
Licensee=Becton Dickinson - Loc 1 - 61, 64/5984713001, User=Chiu, Shelly
Not for Resale, 10/14/2019 19:10:41 MDT

Annex H
(informative)

Dye solution tightness test

H.1 General

Sterilized subassembled syringes ready for filling with the injectable product consist of a syringe barrel with a Luer cone or a staked needle on the side facing the patient (front end) commonly sealed with a tip cap in case of a Luer syringe or a needle shield in case of a syringe with staked needle. The back end is sealed with a plunger stopper that allows the delivery of the drug by pushing the plunger stopper towards the liquid with a plunger rod. The tip cap or needle shield on the one side and the plunger stopper on the other side ensure appropriate sealing of the syringe. The dye solution tightness test is a valuable method to test the tightness of a sterilized subassembled syringe ready for filling in the design development phase.

This test method alone is not sufficient to ensure container closure integrity of the system. The customer should assume responsibility to properly validate a suitable physical, chemical, or microbiological container closure integrity test method to qualify their chosen container closure system (including injectable product).

H.2 Principle

Subassembled syringes that are filled with liquid and stoppered with a plunger stopper are submerged in a dye solution. The subassembled syringes are inspected for leakage by checking the presence or absence of ingress of the dye solution into the syringe after applying a depressurisation/re-pressurization cycle.

H.3 Apparatus, equipment, and reagents

H.3.1 Syringe barrels, according to this part of ISO 11040, preferably prepared as being used in regular production.

H.3.2 Tip caps, needle shields, or any other front end closure, to match the front end opening of the syringe, preferably prepared as being used in regular production.

H.3.3 Plunger stoppers, according to ISO 11040-5 to match the inner diameter of the syringe, preferably prepared as being used in regular production.

H.3.4 Particle-free water to fill the syringes.

H.3.5 Appropriate dye solution, including a colorant and possibly a surfactant.

NOTE Suitable dyes are methylene blue, rhodamine B, and fluorescein; possible surfactants are Triton X-100 and Tween 80.[2)]

It is recommended that the dye solution be filtered through a filter (pore size <1 μm) and stored in a clean, particulate-free container until use.

2) Triton X-100 and Tween 80 are examples of suitable products available commercially. This information is given for the convenience of users of this document and does not constitute an endorsement by ISO of these products.

© ISO 2015 – All rights reserved
Copyright International Organization for Standardization
Provided by IHS Markit under license with ANSI
No reproduction or networking permitted without license from IHS
Licensee=Becton Dickinson - Loc 1 - 61, 64/5984713001, User=Chiu, Shelly
Not for Resale, 10/14/2019 19:10:41 MDT

H.3.6 Vacuum chamber, capable of maintaining a pressure of min. 270 mbar below atmospheric pressure for 30 min.

H.3.7 Hypodermic needle(s), according to ISO 7864 and of size 27 g × 0,5 in.

H.4 Preparation and preservation of test samples and test pieces

H.4.1 Fill the syringes to nominal volume with particle-free water.

H.4.2 Assemble the plunger stopper, leaving an air gap of 2 mm to 5 mm, preferably use the standard piston placement method intended for the future filling process (vent tube or vacuum piston placement).

NOTE This method might not work without an air bubble.

H.4.3 Discard any syringes with liquid beyond or between the ribs.

H.4.4 Create one or more positive leak control samples by creating an open fluid path to the syringe content (e.g. by placing a hypodermic needle or similar device between the front end of the syringe and the corresponding closure or in case of needle shields, by removing the needle shield).

H.4.5 Keep one syringe as a reference sample for comparison (not immersed in dye solution).

H.5 Procedure

H.5.1 Fill the vacuum chamber or an appropriate container with dye solution to a level that all syringes can be completely immersed in the solution.

H.5.2 Immerse the syringes in the dye solution. Ensure that the syringes are completely immersed. Reduce the pressure by 270 mbar. Hold the pressure for 30 min then restore to atmospheric pressure. Allow the syringes to remain immersed in the dye solution for an additional 30 min, then remove them carefully from the solution, rinse the syringes with water until all dye solution is completely removed from the outside, and dry the syringes.

H.5.3 Inspect all syringe contents visually for any traces of the dye solution. Compare the syringes to the positive and reference controls. The positive control should show the presence of dye in the syringe contents.

Spectroscopy might also be used to detect dye.

H.6 Test report

The test report should include the following information:

— colour change of the positive leak sample;

— that the reference sample did not show any colour change;

— number of syringes that show a colour change and thus, leaked;

— any deviations or observations.

© ISO 2015 – All rights reserved

Copyright International Organization for Standardization
Provided by IHS Markit under license with ANSI
No reproduction or networking permitted without license from IHS
Licensee=Becton Dickinson - Loc 1 - 61, 64/5984713001, User=Chiu, Shelly
Not for Resale, 10/14/2019 19:10:41 MDT

Bibliography

[1] ISO 180, *Plastics — Determination of Izod impact strength*

[2] ISO 178, *Plastics — Determination of flexural properties*

[3] ISO 527-2, *Plastics — Determination of tensile properties — Part 2: Test conditions for moulding and extrusion plastics*

[4] ISO 554, *Standard atmospheres for conditioning and/or testing — Specifications*

[5] ISO 2039-2, *Plastics — Determination of hardness — Part 2: Rockwell hardness*

[6] ISO 2859-1, *Sampling procedures for inspection by attributes — Part 1: Sampling schemes indexed by acceptance quality limit (AQL) for lot-by-lot inspection*

[7] ISO 3951 (all parts), *Sampling procedures and charts for inspection by variables for percent nonconforming*

[8] ISO 7619-1, *Rubber, vulcanized or thermoplastic — Determination of indentation hardness — Part 1: Durometer method (Shore hardness)*

[9] ISO 10993-1, *Biological evaluation of medical devices — Part 1: Evaluation and testing within a risk management process*

[10] ISO 11040-7,[3)] *Prefilled syringes — Part 7: Packaging systems for sterilized subassembled syringes ready for filling*

[11] ISO 11608-2, *Needle-based injection systems for medical use — Requirements and test methods — Part 2: Needles*

[12] ISO 11135-1, *Sterilization of health care products — Ethylene oxide — Part 1: Requirements for development, validation and routine control of a sterilization process for medical devices*

[13] ISO 11137 (all parts), *Sterilization of health care products — Requirements for validation and routine control — Radiation sterilization*

[14] ISO 11140 (all parts), *Sterilization of health care products — Chemical indicators*

[15] ISO 14644-1, *Cleanrooms and associated controlled environments — Part 1: Classification of air cleanliness by particle concentration*

[16] ISO 14937, *Sterilization of health care products — General requirements for characterization of a sterilizing agent and the development, validation and routine control of a sterilization process for medical devices*

[17] ISO 15378, *Primary packaging materials for medicinal products - Particular requirements for the application of ISO 9001:2008, with reference to Good Manufacturing Practice (GMP)*

[18] ISO 17665-1, *Sterilization of health care products — Moist heat — Part 1: Requirements for the development, validation and routine control of a sterilization process for medical devices*

[19] ISO 11608-5, *Needle-based injection systems for medical use — Requirements and test methods — Part 5: Automated functions*

[20] ISO 23908, *Sharps injury protection — Requirements and test methods — Sharps protection features for single-use hypodermic needles, introducers for catheters and needles used for blood sampling*

3) To be published.

© ISO 2015 – All rights reserved

Copyright International Organization for Standardization
Provided by IHS Markit under license with ANSI
No reproduction or networking permitted without license from IHS

Licensee=Becton Dickinson - Loc 1 - 61, 64/5984713001, User=Chiu, Shelly
Not for Resale, 10/14/2019 19:10:41 MDT

[21] ISO 80369-7[4)], *Small-bore connectors for liquids and gases in healthcare applications — Part 7: Connectors with 6% (Luer) taper for intravascular or hypodermic applications*

[22] ISO/IEC Guide 98-3, *Uncertainty of measurement — Part 3: Guide to the expression of uncertainty in measurement (GUM:1995)*

[23] AAMI ST72:2011, *Bacterial endotoxins — Test methodologies, routine monitoring, and alternatives to batch testing*

[24] DIN 13097-4, *Medizinische Kanülen — Teil 4: Anschliffarten, Anforderungen und Prüfung*

[25] *Cantor Verlag, Defect evaluation list for containers made of tubular glass, 4th edition, Vol. 19, Editio 88322 Aulendorf, Germany*

[26] CPMP/QWP. 159/01, Note for Guidance on limitations to the use of ethylene oxide in the manufacture of medicinal products, www.ema.europa.eu

[27] PH E. 2.6.1, Sterility, www.edqm.eu

[28] PH E. 2.6.14, Bacterial endotoxins, www.edqm.eu

[29] PH E. 2.9.19, Particulate contamination: sub-visible particles, www.edqm.eu

[30] PH E. 2.9.20, Particulate contamination: visible particles, www.edqm.eu

[31] PH E. 3.1.8, Silicone oil used as a lubricant, www.edqm.eu

[32] PH E. 3.2.1, Glass containers for pharmaceutical use, www.edqm.eu

[33] PH E. 3.2.9, Rubber closures for containers for aqueous parenteral preparations, for powders and for freeze-dried powders, www.edqm.eu

[34] USP <71>, Sterility tests, www.usp.org/

[35] USP <85>, Bacterial endotoxins test www.usp.org/

[36] USP <88>, Biological reactivity tests, in vivo, www.usp.org/

[37] USP <161>, Transfusion and infusion assemblies and similar medical devices

[38] USP <381>, Elastomeric closures of injections, www.usp.org/

[39] USP <660> Containers – Glass, www.usp.org/

[40] USP <788>, Particulate matter in Injections, www.usp.org/

[41] USP <1231>, Water for pharmaceutical purposes, www.usp.org/

[42] USP NF <<dimethicone >>, www.usp.org/

[43] JP 4.01, Bacterial endotoxins tests, http:/jpdb.nihs.gojp/jp16e

[44] JP 4.06, Sterility test, http:/jpdb.nihs.gojp/jp16e

[45] JP 6.06, Foreign insoluble matter test for injections, http:/jpdb.nihs.gojp/jp16e

[46] JP 6.07, Insoluble particulate matter test for injections, http:/jpdb.nihs.gojp/jp16e

[47] JP 7.01, Test for glass containers for injections

[48] JP 7.03, Test for rubber closure for aqueous infusions, http:/jpdb.nihs.gojp/jp16e

4) To be published.

© ISO 2015 – All rights reserved

Copyright International Organization for Standardization
Provided by IHS Markit under license with ANSI
No reproduction or networking permitted without license from IHS
Licensee=Becton Dickinson - Loc 1 - 61, 64/5984713001, User=Chiu, Shelly
Not for Resale, 10/14/2019 19:10:41 MDT

[49] Guidance for industry, pyrogen and endotoxins testing, questions and answers, June 2012, www.fda.gov

© ISO 2015 – All rights reserved
Copyright International Organization for Standardization
Provided by IHS Markit under license with ANSI
No reproduction or networking permitted without license from IHS
Licensee=Becton Dickinson - Loc 1 - 61, 64/5984713001, User=Chiu, Shelly
Not for Resale, 10/14/2019 19:10:41 MDT

--`,,,,`,,,,,`,`,`,,,,,```,`-`-`-`,,`,`,`,,`---

Copyright International Organization for Standardization
Provided by IHS Markit under license with ANSI
No reproduction or networking permitted without license from IHS

Licensee=Becton Dickinson - Loc 1 - 61, 64/5984713001, User=Chiu, Shelly
Not for Resale, 10/14/2019 19:10:41 MDT

ICS 11.040.25

Price based on 52 pages

© ISO 2015 – All rights reserved

Copyright International Organization for Standardization
Provided by IHS Markit under license with ANSI
No reproduction or networking permitted without license from IHS

Licensee=Becton Dickinson - Loc 1 - 61, 64/5984713001, User=Chiu, Shelly
Not for Resale, 10/14/2019 19:10:41 MDT